Life Is On | Schneider Electric

Final Distribution & Wiring Devices

Maximum Retail Price Effective January 30th 2023

se.com/in

Please contact Customer Care Center for Stockable and Non stockable status of references.

The Global Specialist in energy management and automation

Schneider electric is the global specialist in energy management and automation .With revenues of 29 billion Euros in FY2021, Our 140000+ employees serve customers in over 100 countries ,helping them manage their energy and processes in ways that are safe,reliable,efficient and sustainable. Schneider Electric offers integrated solutions across multiple market segments, including leadership positions in energy and infrastructure, industrial processes, building automation and data centres/networks, as well as a broad presence in residential applications. The Installation Systems & Control Division of Schneider Electric provides solutions that represent the best in lifestyle and innovation for offices, hotels and homes. These solutions include award-winning products in the areas of building and home automation, designer switches and sockets. They help the finest architects around the world to achieve more with less.

Schneider Electric Global footprint

29
Billion € sales
FY 2021 revenues

1,40,000+
People in 100 + countries

5%
Revenue devoted to R&D

Schneider Electric India footprint

Employee strength
20,000+
People

Industrial footprint
23
Factories

Sales Offices
76+
Sales Offices

Distribution Centers
26 Distribution Centers

R&D focus
1,900+
R&D staff (based in India)

Channel strength
165K+
Point of sales

Our business offerings

Span the entire spectrum from Plant-to-Plug.

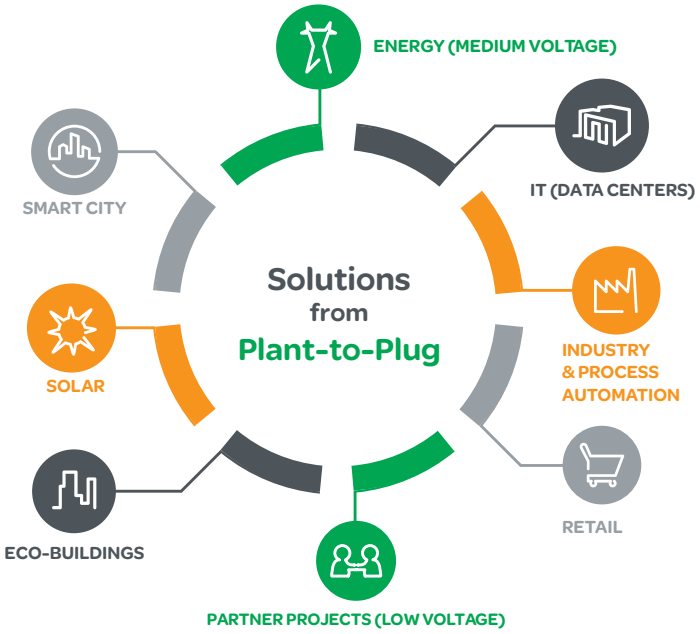

W.E.F. January 30th, 2023

Easy9 Philosophy

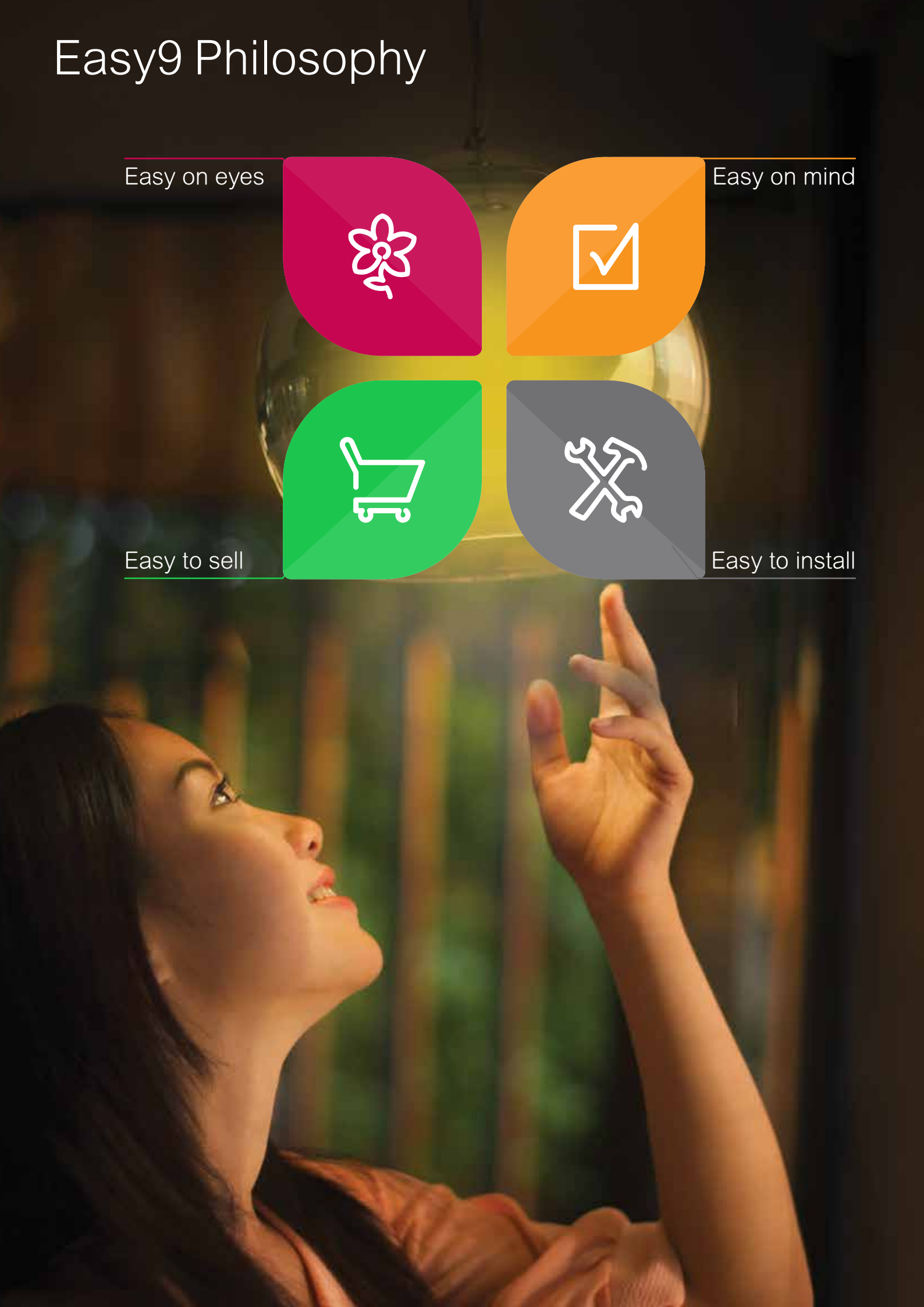

Easy9

Miniature Circuit Breaker (MCB)

For circuit protection against Overload and Short Circuit Current Fault

CE Marked as per IS/IEC 60898 -1
- Breaking Capacity 6kA** and 10kA
- Green Compliance: RoHS, REACh, EoLI, PEP
- Energy Limiting Class 3
- Trip Free Mechanism
- Fast Tripping
- Suitable for Positive Isolation
- Line Load Reversibility
- Laser Printing
- Bi-connect Terminals
- Degree of Protection IP 20
- Operating Voltage 240V / 415V
- Frequency 50Hz

Easy9 - C Curve 6kA

Green Premium

[In] Rated Current (A)	1 Pole Reference	Unit MRP [₹]	2 Pole Reference	Unit MRP [₹]	3 Pole Reference	Unit MRP [₹]	4 Pole Reference	Unit MRP [₹]
Module Width**	1 mod		2 mod		3 mod		4 mod	
Package Size	12 Nos.		6 Nos.		4 Nos.		3 Nos.	
6	EZ9F76106	233	EZ9F76206	877	EZ9F76306	1361	EZ9F76406	1935
10	EZ9F76110	233	EZ9F76210	877	EZ9F76310	1361	EZ9F76410	1935
16	EZ9F76116	233	EZ9F76216	877	EZ9F76316	1361	EZ9F76416	1935
20	EZ9F76120	233	EZ9F76220	877	EZ9F76320	1361	EZ9F76420	1935
25	EZ9F76125	233	EZ9F76225	877	EZ9F76325	1361	EZ9F76425	1935
32	EZ9F76132	233	EZ9F76232	877	EZ9F76332	1361	EZ9F76432	1935
40	EZ9F76140	538	EZ9F76240	1165	EZ9F76340	1970	EZ9F76440	2637

Easy9 - B Curve 10kA

[In] Rated Current (A)	1 Pole Reference	Unit MRP [₹]	2 Pole Reference	Unit MRP [₹]	3 Pole Reference	Unit MRP [₹]	4 Pole Reference	Unit MRP [₹]
Module Width**	1 mod		2 mod		3 mod		4 mod	
Package Size	12 Nos.		6 Nos.		4 Nos.		3 Nos.	
6	EZ9F21106	281	EZ9F21206	*	EZ9F21306	*		
10	EZ9F21110	281	EZ9F21210	*	EZ9F21310	*		
16	EZ9F21116	281	EZ9F21216	1055	EZ9F21316	*		
20	EZ9F21120	281	EZ9F21220	1055	EZ9F21320	*	EZ9F21420	*
25	EZ9F21125	281	EZ9F21225	*	EZ9F21325	*	EZ9F21425	*
32	EZ9F21132	281	EZ9F21232	1055	EZ9F21332	1653	EZ9F21432	2303
40	EZ9F21140	*	EZ9F21240	1523	EZ9F21340	2585		
50	EZ9F21150	*	EZ9F21250	*	EZ9F21350	*		
63	EZ9F21163	833	EZ9F21263	1770	EZ9F21363	2572	EZ9F21463	3215

Note: Please contact nearest Schneider Electric Sales Office or Customer Care Center for Stockable and Non Stockable status of references
* Price on Request
**18mm/module

Easy9 - C Curve10kA

[In] Rated Current (A)	1 Pole Reference	Unit MRP [₹]	2 Pole Reference	Unit MRP [₹]	3 Pole Reference	Unit MRP [₹]	4 Pole Reference	Unit MRP [₹]
Module Width**	1 mod		2 mod		3 mod		4 mod	
Package Size	12 Nos.		6 Nos.		4 Nos.		3 Nos.	
6	EZ9F71106	306	EZ9F71206	1059	EZ9F71306	1686	EZ9F71406	2311
10	EZ9F71110	306	EZ9F71210	1059	EZ9F71310	1686	EZ9F71410	2311
16	EZ9F71116	306	EZ9F71216	1059	EZ9F71316	1686	EZ9F71416	2311
20	EZ9F71120	306	EZ9F71220	1059	EZ9F71320	1686	EZ9F71420	2311
25	EZ9F71125	306	EZ9F71225	1059	EZ9F71325	1686	EZ9F71425	2311
32	EZ9F71132	306	EZ9F71232	1059	EZ9F71332	1686	EZ9F71432	2311
40	EZ9F71140	736	EZ9F71240	1556	EZ9F71340	2441	EZ9F71440	2980
50	EZ9F71150	*	EZ9F71250	*	EZ9F71350	*	EZ9F71450	*
63	EZ9F71163	802	EZ9F71263	1745	EZ9F71363	2589	EZ9F71463	3163

Easy9

Residual Current Circuit Breaker (RCCB) - AC Type

- ISI/CE Marked as per IS/IEC 61008-1
- Green Compliance: RoHS, REACh, EoLI, PEP
- Voltage Independent RCCB
- Suitable for Positive Isolation
- Laser Printing
- Bi-connect Terminal
- Degree of Protection IP 20
- Operating Voltage 240V / 415V
- Frequency 50Hz

Green Premium

[In] Rated Current (A)	Earth Leakage Sensitivity (mA)	2 Pole Reference	Unit MRP [₹]	4 Pole Reference	Unit MRP [₹]
Module Width**		2 Mod		4 Mod	
Package Size		6		3	
25	30	EZ9R35225	3434	EZ9R35425	4654
	100	EZ9R55225	3647	EZ9R55425	4739
	300	EZ9R65225	3717	EZ9R65425	4830
40	30	EZ9R35240	3563	EZ9R35440	4574
	100	EZ9R55240	3817	EZ9R55440	4830
	300	EZ9R65240	3785	EZ9R65440	4835
63	30	EZ9R35263	4769	EZ9R35463	4812
	100	EZ9R55263	5006	EZ9R55463	5152
	300	EZ9R65263	4953	EZ9R65463	5108

Note: Please contact nearest Schneider Electric Sales Office or Customer Care Center for Stockable and Non Stockable status of references
* Price on Request
**18mm/module

Isolator

- CE Marked, AC - 22A, Conforms to IEC 60947-3
- Green Compliance: RoHS, REACh, EoLI, PEP
- Suitable for Positive Isolation
- Line Load Reversibility
- Laser Printing
- Bi-connect Terminals
- Degree of Protection IP 20
- Operating Voltage 240V / 415V
- Frequency 50Hz

Green Premium

[In] Rated Current (A)	2 Pole Reference	Unit MRP [₹]	3 Pole Reference	Unit MRP [₹]	4 Pole Reference	Unit MRP [₹]
Module Width**	2		3 Mod		4 Mod	
Package Size	6		4		3	
40	EZ9S66240	577	EZ9S66340	1226	EZ9S66440	1378
63	EZ9S66263	769	EZ9S66363	2040	EZ9S66463	1403
80	EZ9S66280	1511			EZ9S66480	1880

Note: Please contact nearest Schneider Electric Sales Office or Customer Care Center for Stockable and Non Stockable status of references
* Price on Request
**18mm/module

Timers & Time Switches

Analog Time Switches

- 24H, 7D Programmable switch Voltage Rating: 230V AC +10%, -15%
- Memory: Upto 56 Switching Operations
- Back up of program: Operating reserve for 100, 200 Hours
- Overall dimensions: 5 modules
- Minimum time between two switching operations: 15, 30 min
- Accuracy: ≤ ±1 s/day at +20°C

Description	Module Width 18mm/module	Reference	Unit MRP [₹]
IH 24H 16 A 15 mts interval 1 channel	1	15336	5423
IH 24H 16 A 30 mts interval 1 channel	1	CCT15365	5915
IH 24H + 7 day 10 A 1 channel- Max 16 On, 16 Off and 7 On + 7 Off cycles	3	15366	9102
IH 7 day 16 A 1 channel- Max 21 On and 21 Off cycles	3	CCT15367	8468
IH 24H 16 A 30 mts 1 channel without reserve	3	CCT16364	4805

Digital Time Switches

- 7D, 24H Programmable switch .Voltage Rating: 230V AC +10%, -15%
- Consumption: 1 channel - max. 4VA; 2 channels - max. 7VA
- Memory: Upto 56 Switching Operations
- Back up of program & time by lithium battery: Operating reserve: 6 Years
- Overall dimensions: 5 modules
- Cable length: 100m
- Minimum time between two switching operations: 1 min

Description	Module Width 18mm/module	Reference	Unit MRP [₹]
IHP 1C w (24h/7d) programmable time switch	2.5	CCT15441	11656
IHP+ 1C (24h/7d) SMARTw programmable time switch	2.5	CCT15551	14380
IHP 2C w (24h/7d) programmable time switch	2.5	CCT15443	15036
IHP DCF (24h/7d) SMART programmable time switch	2.5	CCT15858	24853
IHP+ 2C (24h/7d) SMARTw programmable time switch	2.5	CCT15553	16636

Timers

- Switching capacity 16 A, max
- Delay range from 30 sec to 20 min
- Capacity for lighted pushbutton 150 mA
- Electric distribution busbar compatibility
- Output power capacity CCT15232-2300W
- Output power capacity CCT15223-3600W

Description	Module Width 18mm/module	Reference	Unit MRP [₹]
MINs - electronic timer - 0.5 to 20 min	1	CCT15232	6584
MINs - electronic timer - 0.5 to 20 min with switch Off Warning	1	CCT15233	8455
MINs - electronic timer - 0.5 to 20 min with switch Off Warning and Impulse relay function	1	CCT15234	8345

Please contact Customer Care Center for Stockable and Non stockable status of references.

NORMAL STOCK ITEMS

W.E.F. January 30th, 2023

Twilight switch

- Includes wall mounted cell
- Adjustable brightness threshold 2 to 2000 Lux
- 2 LEDs to signal the sensor status and the output status
- Test button: To check the product and load cabling
- Switching capacity: 16Amp
- Screwless Terminals compatible with rigid and flexible wires
- Consumption 6 VA
- Size 45mm

Description	Module Width 18mm/module	Reference	Unit MRP [₹]
IC2000 outdoor (2 - 2000 lux) twilight switch	1	CCT15369	13887
Analogue indoor light sensor cell	-	CCT15262	6852
Wall mounted Analogue outdoor light sensor cell	-	CCT15263	10621
IC100 (2 - 100 lux) twilight switch	1	CCT15482	11682
IC2000 indoor (2 - 2000 lux) twilight switch	1	CCT15285	10410
IC2000p+ (2 - 2000 lux) programmable twilight switch	2.5	CCT15483	25336
IC100kp+ 1C (1 - 99000 lux) SMART programmable twilight switch	2.5	CCT15494	29184
IC100kp+ 2C (1 - 99000 lux) SMART programmable twilight switch	2.5	CCT15495	35928
IC Astro 2C SMART programmable twilight switch	2.5	CCT15245	26484
IC Astro 1C SMART programmable twilight switch	2.5	CCT15225	21224

Time switch accessories

Description	Module Width 18mm/module	Reference	Unit MRP [₹]
Programming kit for IHP / IC	1	CCT15860	11657

Thermostat

Description	Module Width 18mm/module	Reference	Unit MRP [₹]
THP1+ 1C (24h/7d) programmable thermostat	2.5	CCT15834	26516

Note: Please contact nearest Schneider Electric Sales Office or Customer Care Center for Stockable and Non Stockable status of references
* Price on Request
**18mm/module

Easy9 Distribution Boards

IK-08
tested

IP-30
Single door
IP-43
Double door

Features
- Clean and attractive colour and finish (White RAL 9003)
- Unique design of door knob for easy operation
- Compliant to IEC 61439
- IP compliant to IS 8623
- High quality powder coating for long life and high reliability under the toughest of conditions
- Optimized wiring space for a clean installation
- Suitable for surface and flush mounting
- Cement Spill protector helps avoid entry of dust and cement particles
- Reversible door
- Independent centre plate
- 45° angled hole for easy installation and 1 key hole for easy alignment
- Cement guiding mark on all four sides for easy adjustment
- Removable top and bottom gland plates
- Unique 5-hole mounting for single-person fixing
- Simple 3-piece design for quick assembly
- Combi-head screws for tool flexibility

Easy9 Distribution Boards

Metal Enclosures

Description	Module Cutout Width**	Single Door (IP30) Reference	Unit MRP [₹]
2 way Enclosure	2	EZ9EMES02	633
4 way Enclosure	4	EZ9EMES04	714

Metal Clad P&S Units

Description	Module Cutout Width**	Single Door (IP30) Reference	Unit MRP [₹]
EZ9 Metal P&S Unit 10A 1P+N+E	2	EZ9EMS210	1767
EZ9 Metal P&S Unit 20A 1P+N+E	2	EZ9EMS220	2051
EZ9 Metal P&S Unit 20A 3P+E	3	EZ9EMS320	3965
EZ9 Metal P&S Unit 30A 3P+E	3	EZ9EMS330	4696

Phase Selector DBs

Description	Module Cutout Width**	Double Door (IP43) Reference	Unit MRP [₹]
Easy9 DB 4Way phase selector vertical	8 + 4 x 3	EZ9EPVD04N	8276
Easy9 DB 6Way phase selector vertical	8 + 6 x 3	EZ9EPVD06N	8816
Easy9 DB 8Way phase selector vertical	8 + 8 x 3	EZ9EPVD08N	9517

Phase Selector Switch

Description	Reference	Unit MRP [₹]
Easy9 DB 40A selector switch	EZ9EPS40SN	7534
Easy9 DB 63A selector switch	EZ9EPS63SN	8816

SPN DBs

Description	Total Module Cutout Width** (Incomer + Outgoing)"	Single Door (IP30) Reference	Unit MRP [₹]	Double Door Metal (IP43) Reference	Unit MRP [₹]
Easy9 SPN DB 4 way	2 + 2	EZ9ESNS04	1336	EZ9ESND04	2044
Easy9 SPN DB 6 way	2 + 4	EZ9ESNS06	1430	EZ9ESND06	2119
Easy9 SPN DB 8 way	2 + 6	EZ9ESNS08	1518	EZ9ESND08	2324
Easy9 SPN DB 10 way	2 + 8	-	-	EZ9ESND10	2522
Easy9 SPN DB 12 way	2 + 10	EZ9ESNS12	1901	EZ9ESND12	2771
Easy9 SPN DB 16 way	2 + 14	-	-	EZ9ESND16	4083

TPN DBs

Description	Total Module Cutout Width** (Incomer + Outgoing)"	Single Door (IP30) Reference	Unit MRP [₹]	Double Door Metal (IP43) Reference	Unit MRP [₹]
Easy9 TPN DB 4 way - 4 Mod Incomer	4 + 4 x 3	-	-	EZ9ETND04E	4113
Easy9 TPN DB 4 way	4 + 4 x 3	EZ9ETNS04	3715	EZ9ETND04	4747
Easy9 TPN DB 6 way	4 + 6 x 3	EZ9ETNS06	4722	EZ9ETND06	5915
Easy9 TPN DB 8 way	4 + 8 x 3	EZ9ETNS08	6297	EZ9ETND08	7467
Easy9 TPN DB 12 way	4+ 12 x 3	-	-	EZ9ETND12	11436

VTPN DBs

Description	Total Module Cutout Width** (Incomer + Outgoing)	Double Door Metal (IP43) Reference	Unit MRP [₹]
EZ9 DB 4 way VTPN DD with MCCB Incomer 100A	100A MCCB + 4 x 3	EZ9EVTD04	11990
EZ9 DB 8 way VTPN DD with MCCB Incomer 100A	100A MCCB + 8 x 3	EZ9EVTD08	15346
EZ9 DB 12 way VTPN DD with MCCB Incomer 100A	100A MCCB + 12 x 3	EZ9EVTD12	18836

Please contact Customer Care Center for Stockable and Non stockable status of references.

☑ NORMAL STOCK ITEMS

W.E.F. January 30th, 2023

Wander Plugs

PKE16M423

PKE16M723

81383

- Conforms to IEC 60309-1 & IEC 60309-2
- PK PratiKa Screw Connect: same orientation of clamp's screws
- External impact strength: IK08
- Glow wire test: 850°C

[In] Rated Current (A)	[Ue] Rated Operational Voltage (V)	Poles Description	Reference	Unit MRP [₹]
PratiKa Screw				
IP44				
16	200...250	2P + E	PKE16M423 ☑	578
		2P + E	PKX16M423 ●	1168
	380...415	3P + E	PKE16M434 ☑	731
		3P + N + E	PKE16M435 ☑	762
32	200...250 380...415	2P + E	PKE32M423 ☑	909
		3P + E	PKE32M434	1055
		3P + N + E	PKE32M435 ☑	1040
IP67				
16	200...250	2P + E	PKE16M723 ☑	1262
		2P + E	PKX16M723 ●	1857
	380...415	3P + E	PKE16M734	1426
		3P + N + E	PKE16M735	1524
32	200...250	2P + E	PKE32M723	1786
	380...415	3P + E	PKE32M734 ☑	1927
		3P + N + E	PKE32M735 ☑	1941
PK (63A & 125A available in IP67 only)				
63	200...250	2P + E	81378	5063
	380...415	3P + E	81382 ☑	4827
		3P + N + E	81383 ☑	4834
	200...250	2P + E	81390	12929
125	380...415	3P + E	81394	14765
		3P + N + E	81395	14765

Note: * Fast Connection

Small Wall Mounted Sockets

PKF16W423

PKF16W723

PKF32W735

- Conforms to IEC 60309-1 & IEC 60309-2
- External impact strength: IK08
- Glow wire test: 850°C

[In] Rated Current (A)	[Ue] Rated Operational Voltage (V)	Poles Description	Reference	Unit MRP [₹]
IP44				
16	200...250	2P + E	PKF16W423	1011
	380...415	3P + E	PKF16W434	1173
		3P + N + E	PKF16W435	1282
32	200...250	2P + E	PKF32W423	1322
	380...415	3P + E	PKF32W434	1587
		3P + N + E	PKF32W435	1675
IP67				
16	200...250	2P + E	PKF16W723	1607
	380...415	3P + E	PKF16W734	2018
		3P + N + E	PKF16W735	2087
32	200...250	2P + E	PKF32W723	2010
	380...415	3P + E	PKF32W734	2936
		3P + N + E	PKF32W735	3894

Note: For all above Reference MOQ = 1

Please contact Customer Care Center for Stockable and Non stockable status of references.

☑ NORMAL STOCK ITEMS

W.E.F. January 30th, 2023

Wall Mounted Sockets

81178

81183

- Conforms to IEC 60309-1 & IEC 60309-2
- Rated operational voltage upto 415V
- Rated operational current upto 125A
- External impact strength: IK08
- Glow wire test: 850°C
- Available only in IP67

[In] Rated Current (A)	[Ue] Rated Operational Voltage (V)	Poles Description	Reference	Unit MRP [₹]
63	200...250	2P + E	81178	6237
	380...415	3P + E	81182 ●	6419
		3P + N + E	81183	6511
125	380...415	3P + E	81194	22493
		3P + N + E	81195	22603

Wander Sockets

PKF16M423

81483

PKF32M735

- PK PratiKa Screw Connect: same orientation of clamp's screws.
- PK PratiKa: 16A & 32A; IP44 & IP67
- External impact strength: IK08
- Glow wire test: 850 °C
- Conforms to IEC 60309-1 & IEC 60309-2

[In] Rated Current (A)	[Ue] Rated Operational Voltage (V)	Poles Description	Reference	Unit MRP [₹]
PratiKa Screw				
IP44				
16	200...250	2P + E	PKF16M423 ☑	800
		2P + E	PKY16M423	882
	380...415	3P + E	PKF16M434	923
		3P + N + E	PKF16M435	1007
32	200...250	2P + E	PKF32M423 ☑	1100
	380...415	3P + E	PKF32M434	1335
		3P + N + E	PKF32M435 ☑	1344
IP67				
16	200...250	2P + E	PKF16M723	1481
		2P + E	PKY16M723 ●	1802
	380...415	3P + E	PKF16M734	1857
		3P + N + E	PKF16M735	1941
32	380...415	2P + E	PKF32M723	2037
		3P + E	PKF32M734	2254
		3P + N + E	PKF32M735	2275
PK (63A & 125A available in IP67 only)				
63	200...250	2P + E	81478	5514
	380...415	3P + E	81482	5563
		3P + N + E	81483	5653
125	200...250	2P + E	81490	21116
	380...415	3P + E	81494	17408
		3P + N + E	81495	17749

Also Available on Request:
- Patented FAST connect Plugs & Sockets - innovative cabling system that enables connection without stripping the conductor and with absolutely no screws required
- Extra Low Voltage Plugs & Sockets down to 50V

Please contact nearest Schneider Electric Sales Office or Customer Care for Reference and Prices

Note: For all above Reference MOQ = 1

Please contact Customer Care Center for Stockable and Non stockable status of references.

☑ NORMAL STOCK ITEMS

W.E.F. January 30th, 2023

Panel Mounted Sockets - Angled

PKF16F423

PKF32F723

81283

- PK PratiKa Screw Connect: same orientation of clamp's screws
- External impact strength: IK08
- Glow wire test: 850°C
- Conforms to IEC 60309-1 & IEC309-2

[In] Rated Current (A)	[Ue] Rated Operational Voltage (V)	Poles Description	Reference	Unit MRP [₹]
PratiKa Screw				
IP44				
16	200...250	2P + E	PKF16F423 ☑	619
		2P + E	PKY16F423 ●	668
	380...415	3P + E	PKF16F434	923
		3P + N + E	PKF16F435 ☑	984
32	200...250	2P + E	PKF32F423 ☑	1100
	380...415	3P + E	PKF32F434	1276
		3P + N + E	PKF32F435	1271
IP67				
16	200...250	2P + E	PKF16F723 ☑	1166
	380...415	2P + E	PKY16F723 ●	1412
		3P + E	PKF16F734	1328
		3P + N + E	PKF16F735 ☑	1344
32	200...250	2P + E	PKF32F723	1517
	380...415	3P + E	PKF32F734	1773
		3P + N + E	PKF32F735	1802
PK (63A & 125A available in IP67 only)				
63	200...250	2P + E	81278	4979
	380...415	3P + E	81282 ☑	4987
		3P + N + E	81283 ☑	5085
125	200...250	2P + E	81290	16372
	380...415	3P + E	81294	16797
		3P + N + E	81295	16879

Panel Mounted Sockets - Straight

PKF16G423

PKF16G723

81683

- PK PratiKa Screw Connect: same orientation of clamp's screws
- External impact strength: IK08
- Glow wire test: 850°C
- Conforms to IEC 60309-1 & IEC309-2

[In] Rated Current (A)	[Ue] Rated Operational Voltage (V)	Poles Description	Reference	Unit MRP [₹]
PratiKa Screw				
IP44				
16	200...250	2P + E	PKF16G423	701
	380...415	2P + E	PKY16G423	909
		3P + E	PKF16G434	1223
		3P + N + E	PKF16G435	1055
32	200...250	2P + E	PKF32G423	1113
	380...415	3P + E	PKF32G434	1282
		3P + N + E	PKF32G435	1389
IP67				
16	200...250	2P + E	PKF16G723	1173
		2P + E	PKY16G723 ●	1322
	380...415	3P + E	PKF16G734	1613
		3P + N + E	PKF16G735	1344
32	200...250	2P + E	PKF32G723	1496
	380...415	3P + E	PKF32G734	1684
		3P + N + E	PKF32G735	1747
PK (63A & 125A available in IP67 only)				
63	200...250	2P + E	81678	6025
	380...415	3P + E	81682	5036
		3P + N + E	81683	5036
125		3P + N + E	81695	16879

*Fast Connection
Note: For all above Reference MOQ = 1

Please contact Customer Care Center for Stockable and Non stockable status of references.

☑ NORMAL STOCK ITEMS

W.E.F. January 30th, 2023

Sockets with Interlock Switches - for guaranteed safety of operation

- Allows closure of main switch only when the plug is fully inserted in socket - when complete mechanical & electrical connection has occurred
- Plug removal is possible only when the switch is in “off” position

Wall Mounted Sockets with Interlock Switch Unika (w/o protection)

83047

83081

- Switch designed for use in AC 22A class applications
- Conforms to IEC 60309-1 & IEC 60309-2
- Rated operational voltage upto 415V
- Rated operational current upto 32A
- External impact strength: IK08
- Available in IP44 / IP65 versions
- Glow wire test: 750°C

[In] Rated Current (A)	[Ue] Rated Operational Voltage (V)	Poles Description	Reference	Unit MRP [₹]
IP44				
16	200...250	2P + E	83031	8416
	380...415	3P + E	83035	14155
		3P + N + E	83036	11878
32	200...250	2P + E	83042 ☑	10926
	380...415	3P + E	83046	15474
		3P + N + E	83047	12875
IP65				
16	200...250	2P + E	83081	8708
	380...415	3P + E	83085	11991
		3P + N + E	83086	12235
32	200...250	2P + E	83092	11412
	380...415	3P + E	83096	16647
		3P + N + E	83097	13703

Socket with Interlock Switch & DIN Rail Isoblock (4.5 modules)

82754

83796

- Switch designed for use in AC- 22A class applications
- Conforms to IEC 60309-1 & IEC 60309-2
- Provision to DIN mount 4.5 module device
- External impact strength: IK10
- Available in IP65 version
- Glow wire test: 850°C

[In] Rated Current (A)	[Ue] Rated Operational Voltage (V)	Poles Description	Reference	Unit MRP [₹]
16	200...250	2P + E	82754 ☑	10433
	380...415	3P + E	82758	15439
		3P + N + E	82759	15954
32	200...250	2P + E	83791 ☑	12352
	380...415	3P + E	83795	17763
		3P + N + E	83796	14716

Socket with Interlock Switch & DIN Rail Isoblock (6 modules)

82766

82771

- Switch designed for use in AC- 22A class applications
- Conforms to IEC 60309-1 & IEC 60309-2
- Provision to DIN mount 6 module device
- External impact strength: IK10
- Available in IP65 version
- Glow wire test: 850°C

[In] Rated Current (A)	[Ue] Rated Operational Voltage (V)	Poles Description	Reference	Unit MRP [₹]
32	200...250	2P + E	82766	16295
	380...415	3P + E	82770	23213
		3P + N + E	82771	19684
63	380...415	3P + E	82782	21957
		3P + N + E	82783	22027

Note: For all above Reference MOQ = 1

Please contact Customer Care Center for Stockable and Non stockable status of references.

☑ NORMAL STOCK ITEMS

W.E.F. January 30th, 2023

Metal Clad Plugs & Sockets

ELECTRA Metal Clad Plugs & Sockets are specially designed incorporating the latest safety, quality and user friendly features.

Construction

- The casting is made from non-corroding die-cast aluminum alloy combining exceptional compactness with high strength
- The design/construction eliminates the possibility of mismatch in fitting of plugs in corresponding sockets
- The floating contacts in the sockets are self aligning and facilitates smooth plugging in without undue pressure (These can be easily removed for wiring)
- A provision for pilot pin facilitates mechanical interlocking in case of 63A ratings

Human Safety

Specially designed shroud to avoid accidental finger contact with plug-pins while inserting/removing the plug
Similarly, the contact tubes in sockets are deeply recessed to avoid human contact

- The earthing pins ensure that earth connection is made first and broken last, being longer than conducting pins
- The visible earth terminals facilitate easy checking of earth connection
- The cable grip to the plug is made very strong by providing a compression gland and by protecting it at the point of entry by a strong rubber guard

Applications

Industrial, Commercial & Domestic portable equipments like Hand/Power Tools, Industrial Ovens, Welding Sets, Mobile Generators, Furnaces, Ships, Office Machines, Refrigerators, Coolers, Air-Conditioners, Overhead Cranes, Chilling Cabinets, Tile Polishers and Sewing Machines

Plug

Rating (A)	Poles Description	Voltage (V)	MOQ	Reference	Unit MRP [₹]
10	2P	250	30	AP10 ☑	275
20	2P	250	30	AP20 ☑	289
20	3P	440	30	BP20 ☑	384
30	3P	440	20	BP30 ☑	700
63	3P+N+E	440	4	CP63 ☑	3166

Socket

Rating (A)	Poles Description	Voltage (V)	MOQ	Reference	Unit MRP [₹]
10	2P	250	30	AS10 ☑	289
20	2P	250	30	AS20 ☑	308
20	3P	440	30	BS20 ☑	432
30	3P	440	20	BS30 ☑	741
63	3P+N+E	440	4	CS63 ☑	3479

Please contact Customer Care Center for Stockable and Non stockable status of references.

☑ NORMAL STOCK ITEMS

W.E.F. January 30th, 2023

Complete range of switches & sockets suitable for both indoor & outdoor applications like Kitchens, Swimming Pools, Landscape Gardens, Exterior Walls and Other Environmentally Challenged Locations.

56SW116LE-GY

56SW216LE-GY

56SW332LE-GY

Description	IP Rating	Reference	Unit MRP [₹]
Surface Switches			
Single Pole Switches Less Enclosure			
1 Pole 250V 10A	IP66	56SW110LE-GY	3710
1 Pole 250V 16A	IP66	56SW116LE-GY	3476
1 Pole 250V 20A	IP66	56SW120LE-GY	5264
1 Pole 250V 32A	IP66	56SW132LE-GY	6217
Double Pole Switches Less Enclosure			
2 Pole 500V 16A	IP66	56SW216LE-GY	6007
2 Pole 500V 20A	IP66	56SW220LE-GY	6007
2 Pole 500V 32A	IP66	56SW232LE-GY	6974
2 Pole 500V 50A	IP66	56SW250LE-GY	8144
Triple Pole Switches Less Enclosure			
3 Pole 500V 10A	IP66	56SW310LE-GY	5555
3 Pole 500V 16A	IP66	56SW316LE-GY	5795
3 Pole 500V 20A	IP66	56SW320LE-GY	6101
3 Pole 500V 32A	IP66	56SW332LE-GY	7113
3 Pole 500V 50A	IP66	56SW350LE-GY	8207
3 Pole 500V 63A	IP66	56SW363LE-GY	9527
Four Pole Switches Less Enclosure			
4 Pole 500V 20A	IP66	56SW420LE-GY	8054

66CV563-RG

66P563-EO

Description	IP Rating	Reference	Unit MRP [₹]
IP66 Industrial Combination Switch Sockets with Enclosure			
Single Pole Switches Less Enclosure			
500V, 63A with 4 pole switch and 63A 5 Pin Socket	IP66	66CV563-RG	107969
Plug Top 5 Pin 500V 63A	IP66	66P563-EO	32407

Please contact Customer Care Center for Stockable and Non stockable status of references.

☑ NORMAL STOCK ITEMS

W.E.F. January 30th, 2023

56SO316RP-LE-GY-EX

56SO432LE-GY

56SO532LE-GY

Description	IP Rating	Reference	Unit MRP [₹]
Surface Socket Outlets			
3 Pin Sockets Less Enclosure			
3 Pin 250V 16A Indian Standard	IP66	56SO316RP-LE-GY-EX	3499
3 Pin 250V 20A Round Pin	IP66	56SO320LE-GY	5080
3 Pin 250V 32A Round Pin	IP66	56SO332LE-GY	5605
4 Pin Sockets Less Enclosure			
4 Pin 500V 20A Round Pin	IP66	56SO420LE-GY	7515
4 Pin 500V 32A Round Pin	IP66	56SO432LE-GY	8986
4 Pin 500V 50A Round Pin	IP66	56SO450LE-GY	13826
5 Pin Sockets Less Enclosure			
5 Pin 500V 10A Round Pin	IP66	56SO510LE-GY	8121
5 Pin 500V 20A Round Pin	IP66	56SO520LE-GY	8121
5 Pin 500V 32A Round Pin	IP66	56SO532LE-GY	9644
5 Pin 500V 40A Round Pin	IP66	56SO540LE-GY	13914
5 Pin 500V 50A Round Pin	IP66	56SO550LE-GY	14286

*Alternate reference 56SO440-GY (coming soon)

56PA420-EO

56PA532-EO

56CV1520-GY

Description	IP Rating	Reference	Unit MRP [₹]
Plugs			
3 Pin Angle Plugs			
3 Pin 250V 20A Round Pin	IP66	56PA320-EO	5264
3 Pin 250V 32A Round Pin	IP66	56PA332-EO	6023
4 Pin Angle Plugs			
4 Pin 500V 20A Round Pin	IP66	56PA420-EO	6414
4 Pin 500V 32A Round Pin	IP66	56PA432-EO	6677
4 Pin 500V 40A Round Pin	IP66	56PA440-EO	8970
4 Pin 500V 50A Round Pin	IP66	56PA450-EO	7923
5 Pin Angle Plugs			
5 Pin 500V 10A Round Pin	IP66	56PA510-EO	6305
5 Pin 500V 20A Round Pin	IP66	56PA520-EO	6305
5 Pin 500V 32A Round Pin	IP66	56PA532-EO	7284
5 Pin 500V 40A Round Pin	IP66	56PA540-EO	7704
5 Pin 500V 50A Round Pin	IP66	56PA550-EO	7887
Combination Switch Socket Outlet			
IP66 Interlocked Switch Socket with Enclosure			
4 Pin 500V 20A Round Pin	IP66	56CVI420-GY	24114
5 Pin 500V 20A Round Pin	IP66	56CVI520-GY	24932
5 Pin 500V 32A Round Pin	IP66	56CVI532-GY	25160

Please contact Customer Care Center for Stockable and Non stockable status of references.

☑ NORMAL STOCK ITEMS

W.E.F. January 30th, 2023

56 Series

56DB2-GY

56CB4N-GY

Description	IP Rating	Reference	Unit MRP [₹]
Adaptable Enclosures with Gear Tray			
2 Gangpoints, 198X101X140mm	IP66	56DB2-GY	6879
3 Gangpoints, 294X101X140mm	IP66	56DB3-GY	8748
6 Gangpoints, 294X198X140mm	IP66	56DB6-GY	20649
Junction Boxes			
1 Gangpoint, 107X101X90mm	IP66	56JB1-GY	2993
2 Gangpoints, 204X101X90mm	IP66	56JB2-GY	4811
3 Gangpoints, 300X101X90mm	IP66	56JB3-GY	10310
4 Gangpoints, 204X198X90mm	IP66	56JB4-GY	9679

Description	Module Width	Reference	Unit MRP [₹]
Switchgear Cover Assembly			
For 1,2,3 Pole MCB with 4 Pole RCD (max. 4M Width)	4	56CB4N-GY	5714

56FA2-GY

56E2-GY

56E1-GY-EX

56E3-GY

Description	No. of Gangs	Reference	Unit MRP [₹]
Flush Surrounds			
Flush Surround	1	56FA1-GY	2790
Flush Surround	2	56FA2-GY	2815
Flush Surround	3	56FA3-GY	4432
Mounting Enclosures (Back Boxes)			
198X101X63mm	2	56E2-GY	3141
294X101X63mm	3	56E3-GY	4986
198X198X63mm	4	56E4-GY	6414
294X198X63mm	6	56E6-GY	10256
391X198X63mm	8	56E8-GY	13456
391X391X63mm	16	56E16-GY	24381

Please contact Customer Care Center for Stockable and Non stockable status of references.

☑ NORMAL STOCK ITEMS

W.E.F. January 30th, 2023

SWITCH TO STYLE

Perfect solutions for the perfect you

Clipsal X

Opale

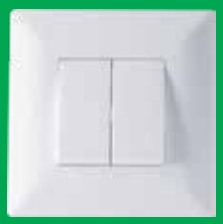

Anti-Bacterial Range | LIVIA Life. Style.

Avatar On

ZENcelo

Unica Pure

LIVIA - Switch to the extra-ordinary

Anti-Bacterial Range

LIVIA Life. Style.

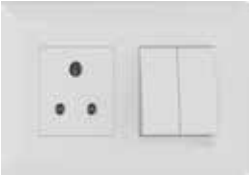

- **Sleek Design** - 2.7mm thin plate with curved body to minimize dust accumulation
- **Stylish Looks** - Soft white texture with glossy finish
- **Robust & Strong** - Innovative honeycomb designed grid plate for extra rigidity
- **Reliable** - High grade heat-resistant polycarbonate and laser marked wiring diagrams. Tested for 4 Lac clicks
- **Easy to Install** - Snap-In / Snap-Out front loading modules and Bigger terminal holes
- **Green & Eco Friendly** - RoHS compliant range

P1001

P1081

P1002

P1025

P2005NS

P2106

P3012

P3200

P7003

P7003_PG

P6005

P5001

P0703

P0704

NEW Livia Painted Grey to be launched soon.

Description	Reference for White	Unit MRP [₹]	Box Qty	Reference for Steel Grey	Unit MRP [₹]	Box Qty
Switches						
10AX 1 way switch	P1001	136	20	P1001_PG	190	20
10AX 1 way switch with Indicator lamp	P1081	281	20	P1081_PG	391	20
10AX 2 way switch	P1002	222	20	P1002_PG	276	20
16AX 1 way switch	P1101	239	20	P1101_PG	297	20
16AX 1 way switch with Indicator lamp	P1181	336	20	P1181_PG	388	20
16AX 1 way switch (2M)	P1121	375	10	P1121_PG	496	10
16AX 2 way switch	P1102	329	10	P1102_PG	456	1
20A 1 way switch (1M) with indicator lamp	P11201	303	20	P11201_PG	395	20
20A DP switch with Indicator lamp	P1120	534	20	P1120_PG	749	20
32A DP switch with Indicator lamp	P1132	781	10	P1132_PG	1,023	20
Motor Starter Switch						
25A Motor Starter switch	P1186MS	1,353	1	P1186MS_PG	1,834	1
Bell Push						
10A Bell Push switch	P1005	248	20	P1005_PG	341	10
10A Bell Push switch (2M)	P1025	333	10	P1025_PG	503	10
10A bell push switch with Indicator	P1085	300	20	P1085_PG	419	20
10A bell push switch with Indicator (2M)	P1086	388	10	P1086_PG	542	10
Sockets						
6A 3Pin socket Outlet with shutter (BIS)	P2005NS	264	10	P2005NS_PG	322	10
6A/16A 3-pin Socket Outlet with Shutter	P2106	397	10	P2106_PG	473	10
Fan Regulators & Dimmers						
Step type fan regulator (1M)	P3100	765	10	P3100_PG	966	10
Step type fan regulator (2M)	P3200	889	6	P3200_PG	1,121	10
Dimmer 400W (1M)	P3004	1,421	6	P3004_PG	1,938	6
Dimmer 1000W (2M)	P3012	2,104	6	P3012_PG	2,463	6
USB Charger						
USB Charger	P7002	1,752	10	P7002_PG	2,138	10
Livia - A+C Type USB Charger (1M)	P7003	2842	10	P7003_PG*	3420	10
Accessories						
RJ 11 Telephone outlet with shutter	P4011	218	20	P4011_PG	311	20
RJ 45 Cat 5e Data outlet with shutter	P4045	745	20	P4045_PG	919	20
RJ 45 Cat6 Data outlet with shutter	P4046	829	20	P4046_PG	1,056	20
TV socket	P4500	210	20	P4500_PG	297	20
Blank off unit (1M)	P0001	59	40	P0001_PG	77	40
Foot Lamp with LED	P7001	899	1	P7001_PG	1,108	1
Cord Outlet	P4550	276	20	P4550_PG	339	20
LED Phase Indicator	P5001	372	20	-	-	-
Hotel Series						
DND Switch	P6002	306	20	P6002_PG	373	20
MMR Switch	P6004	306	20	P6004_PG	373	20
DND & MMR Indicator	P6013	863	20	P6013_PG	1,210	20
20A Key Card Switch - Electronic (3M)	P6005	4,685	1	P6005_PG	6,541	1
Cover Plates						
1-2 M Grid & 1 M Cover Frame	P0701	149	15	P0701_PG	203	15
1-2 M Grid & 2 M Cover Frame	P0702	149	15	P0702_PG	186	15
3 M Grid & 3 M Cover Frame	P0703	189	10	P0703_PG	219	10
4 M Grid & 4 M Cover Frame	P0704	219	8	P0704_PG	270	8
6 M Grid & 6 M Cover Frame	P0706	276	5	P0706_PG	357	5
8 M Grid & 8 M Cover Frame - Horizontal	P0708	363	5	P0708_PG	441	5
8 M Grid & 8 M Cover Frame - Square	P0709	438	5	P0709_PG	615	5
9 M Grid & 9M Cover Frame	P07010	412	5	P07010_PG	569	5
12 M Grid & 12 M Cover Frame	P0712	530	5	P0712_PG	657	5
16 M Grid & 16M Cover Frame	P07016	631	5	P07016_PG	753	5
18 M Grid & 18 M Cover Frame	P0718	763	5	P0718_PG	1,071	5

**Livia Dark Grey will be available only till stock last.

Please contact Customer Care Center for Stockable and Non stockable status of references.

☑ NORMAL STOCK ITEMS

W.E.F. January 30th, 2023

Clipsal X - As Stylish As Your World

Xtra STYLE
- Trendy Dual tone colour and finish
- Contemporary sloped design that blends seamlessly with the wall
- Vibrant and youthful colours and textured finishes that can stand out or blend in
- Textured finishes to match most Indian decors – Wood, Slate & Leather

Xtra STRONG
- Made to last for more than 1 Million Clicks
- 10A rated switches to enable Grouping – add as many loads as you want
- UV Stabilized to avoid decoloring

Xtra COMFORT
- Least noise level for unobstrusive switching
- Smooth finish which avoids light reflection off the surface
- Glossy Band making it Easy to Clean
- Large plate overhang to hide wall & paint imperfections

CPX101SW1M_WE

CPX161SWL1M_WE

CPX20DP2M_WE

CPX6BP2M_WE

CPX6SK3PNS_WE

CPXACUSB1P1M_WE

CPX5STFAN2M_WE

CPX21USB1P1M_WE

CPXACUSB1P1M_WE

CPXTVCOAX1M_WE

CPXCORD1M_WE

CPXDNDIN1M_WE

CPXMMRIN1M_WE

CPXKEYCARDSW_WE

Description	Reference for White	Unit MRP (₹)	Pack	Reference for Coke Grey	Unit MRP (₹)	Pack
Switches						
10AX 1 Way Switch	CPX101SW1M_WE	127	20	CPX101SW1M_GY	226	20
10A X1 Way Switch with Indicator	CPX101SWL1M_WE	311	20	CPX101SWL1M_GY	368	1
10AX 2 Way Switch	CPX102SW1M_WE	264	20	CPX102SW1M_GY	319	20
16AX 1 Way Switch	CPX161SW1M_WE	319	1	CPX161SW1M_GY	393	1
16AX 1 Way Switch with Indicator	CPX161SWL1M_WE	419	20	CPX161SWL1M_GY	496	20
16AX 2 Way Switch	CPX162SW1M_WE	423	1	CPX162SW1M_GY	500	20
10AX 1 Way Switch (2M)	CPX101SW2M_WE	350	1	CPX101SW2M_GY	417	10
16AX 1 Way Switch (2M)	CPX161SW2M_WE	449	1	CPX161SW2M_GY	534	10
10AX 1W Switch with Indicator (2M)	CPX101SWL2M_WE	442	1	CPX101SWL2M_GY	528	10
16AX 1W Switch with Indicator (2M)	CPX161SWL2M_WE	516	1	CPX161SWL2M_GY	637	10
20A DP Switch with Indicator (2M)	CPX20DP2M_WE	710	1	CPX20DP2M_GY	828	1
32A DP Switch with Indicator (2M)	CPX32DP2M_WE	1,080	1	CPX32DP2M_GY*	1,634	10
Motor Starter Switch						
25A Motor Starter Switch	CPXMTSTART2M_WE	1,224	10	CPXMTSTART2M_GY	2,267	10
Bell Press						
6A Bell Push	CPX6BP1M_WE	297	20	CPX6BP1M_GY	340	1
6A Bell Push (2M)	CPX6BP2M_WE	451	10	CPX6BP2M_GY	527	1
6A Bell Push with Indicator	CPX6BPL1M_WE	411	1	CPX6BPL1M_GY	491	20
6A Bell Push with Indicator (2M)	CPX6BPL2M_WE	491	1	CPX6BPL2M_GY	558	10
Sockets						
6A 3P Socket Outlet with Shutter (BIS Std.)	CPX6SK3PNS_WE	337	10	CPX6SK3PNS_GY	382	10
6A/16A 3P Socket with Shutter	CPX616SK_WE	510	10	CPX616SK_GY	576	10
Fan Regulators and Dimmers						
5-Step Fan Regulator (2M)	CPX5STFAN2M_WE	1,133	1	CPX5STFAN2M_GY	1,356	5
4-Step Fan Regulator (1M), White	CPX4STFAN1M_WE	1,033	10	CPX4STFAN1M_GY	1,237	10
400W Dimmer (1M)	CPXDIM1M_WE	1,116	1	CPXDIM1M_GY	1,274	1
400W Dimmer (2M)	CPXDIM2M_WE	1,651	1	CPXDIM2M_GY	2,065	1
1200W Dimmer	CPXDIM2M_1200_WE	2,125	1	CPXDIM2M_1200_GY	2,548	5
USB Chargers						
2.1A USB Charger (1M)	CPX21USB1P1M_WE	1,836	1	CPX21USB1P1M_GY	2,168	1
2.1A USB Charger (2M)	CPX21USB2P2M_WE	2,585	15	CPX21USB2P2M_GY	3,716	15
2.4A A+C USB Charger(1M)	CPXACUSB1P1M_WE	3,134	10	CPXACUSB1P1M_GY	3,382	10
Accessories						
RJ11 Tel Outlet, No Shutter	CPXRJ11NS1M_WE	276	5	CPXRJ11NS1M_GY	334	5
RJ11 Tel Outlet with Shutter	CPXRJ11_1M_WE	267	5	CPXRJ11_1M_GY	319	5
Twin RJ11 Tel Outlets (1M)	CPXRJ11TW1M_WE	415	12	CPXRJ11TW1M_GY	506	12
RJ45 Data Outlet with Shutter	CPXRJ451M_WE	913	12	CPXRJ451M_GY	1,070	12
TV Socket	CPXTVCOAX1M_WE	250	5	CPXTVCOAX1M_GY	305	5
RJ45 Cover for Keystone Type	CPXRJ45KS1M_WE	313	5	CPXRJ45KS1M_GY	384	5
Gripped Cord Outlet	CPXCORD1M_WE	298	5	CPXCORD1M_GY	342	10
Foot Light with LED	CPXFTLP2M_WE	1,172	-	CPXFTLP2M_GY	1,393	-
Buzzer	CPXBUZZ2M_WE	1,224	-	CPXBUZZ2M_GY	1,283	2
Blank Off Unit (1M)	CPXBLANK1M_WE	70	-	CPXBLANK1M_GY	94	5
Neon Phase Indicator						
Neon Phase Indicator (Green)	CPXPHASEG1M	438	12	-	-	-
Neon Phase Indicator (Red)	CPXPHASER1M	438	12	-	-	-
Neon Phase Indicator (Red)	CPXPHASEY1M	438	12	-	-	-
Hotel Series						
DND Indicator	CPXDNDIN1M_WE	650	12	-	-	-
DND Switch	CPXDNDSW1M_WE	510	1	CPXDNDSW1M_GY	603	1
MMR Indicator	CPXMMRIN1M_WE	650	12	-	-	-
MMR Switch	CPXMMRSW1M_WE	510	1	CPXMMRSW1M_GY	603	20
16A Electronic Keycard Switch	CPXKEYCARDSW_WE	5,926	1	CPXKEYCARDSW_GY	6,686	1
Shaver Socket Horizontal	CPXSHAVER_WE	6,126	1	CPXSHAVER_GY	7,227	1

Please contact Customer Care Center for Stockable and Non stockable status of references.

☑ NORMAL STOCK ITEMS

W.E.F. January 30th, 2023

Clipsal X - As Stylish As Your World

White

Coke Grey

Metallic Copper

Charcoal Black

Description	Reference for White	Unit MRP [₹]	Pack	Reference for Coke Grey	Unit MRP [₹]	Pack	Reference for Metallic Copper	Unit MRP [₹]	Pack	Reference for Charcoal Black	Unit MRP [₹]	Pack
Cover Plates												
1M or 2M Grid & 1M Cover Frame	CPXCP1M_WE	173	1	CPXCP1M_GY	296	10	CPXCP1M_MC	344	10	CPXCP1M_CB	344	10
1M or 2M Grid & 2M Cover Frame	CPXCP2M_WE	187	10	CPXCP2M_GY	319	10	CPXCP2M_MC	373	10	CPXCP2M_CB	373	10
3M Grid & 3M Cover Frame	CPXCP3M_WE	215	10	CPXCP3M_GY	363	10	CPXCP3M_MC	426	10	CPXCP3M_CB	426	10
3M Uni Grid & 3M Cover Frame	CPXCP3MU_WE	255	10	CPXCP3MU_GY	451	10	CPXCP3MU_MC	484	1	CPXCP3MU_CB	505	1
4M Grid & 4M Cover Frame	CPXCP4M_WE	253	1	CPXCP4M_GY	429	10	CPXCP4M_MC	501	10	CPXCP4M_CB	501	10
6M Grid & 6M Cover Frame	CPXCP6M_WE	367	5	CPXCP6M_GY	623	5	CPXCP6M_MC	729	1	CPXCP6M_CB	729	1
8M Grid & 8M Cover Frame, Horizontal	CPXCP8ML_WE	454	1	CPXCP8ML_GY	772	5	CPXCP8ML_MC	903	5	CPXCP8ML_CB	903	5
8M Grid & 8M Cover Frame, Square	CPXCP8MSQ_WE	491	1	CPXCP8MSQ_GY	955	1	CPXCP8MSQ_MC	1066	1	CPXCP8MSQ_CB	1066	1
9M Cover Frame	CPXCP9M_WE	484	5	CPXCP9M_GY	817	5	-	-	-	-	-	-
9M Grid & 9M Cover Frame	-		-	-		-	-	-	-	CPXCP9M_CB	1235	5
12M Grid &12M Cover Frame	CPXCP12M_WE	555	1	CPXCP12M_GY	1120	1	CPXCP12M_MC	1254	5	CPXCP12M_CB	1254	5
16M Cover Frame	CPXCP16M_WE	668	5	CPXCP16M_GY	1090	5	-	-	-	-	-	-
18M Grid &18M Cover Frame	CPXCP18M_WE	858	5	-	-		-	-	-	-	-	-

Please contact Customer Care Center for Stockable and Non stockable status of references.

☑ NORMAL STOCK ITEMS

W.E.F. January 30th, 2023

Clipsal X - As Stylish As Your World

Sheesham

Rich Leather

Slate

Description	Reference for Sheesham	Unit MRP [₹]	Pack	Reference for Metallic Rich Leather	Unit MRP [₹]	Pack	Reference for Slate	Unit MRP [₹]	Pack
Cover Plates									
1M or 2M Grid & 1M Cover Frame	CPXCP1M_SH	544	10	CPXCP1M_RL	544	10	CPXCP1M_SL	544	10
1M or 2M Grid & 2M Cover Frame	CPXCP2M_SH	589	1	CPXCP2M_RL	589	1	CPXCP2M_SL	589	1
3M Grid & 3M Cover Frame	CPXCP3M_SH	673	10	CPXCP3M_RL	673	10	CPXCP3M_SL	673	10
3M Uni Grid & 3M Cover Frame	CPXCP3MU_SH	764	1	CPXCP3MU_RL	797	1	CPXCP3MU_SL	764	1
4M Grid & 4M Cover Frame	CPXCP4M_SH	792	1	CPXCP4M_RL	792	1	CPXCP4M_SL	792	1
6M Grid & 6M Cover Frame	CPXCP6M_SH	1150	1	CPXCP6M_RL	1150	1	CPXCP6M_SL	1150	1
8M Grid & 8M Cover Frame, Horizontal	CPXCP8ML_SH	1427	5	CPXCP8ML_RL	1427	5	CPXCP8ML_SL	1427	5
8M Grid & 8M Cover Frame, Square	CPXCP8MSQ_SH	1685	1	CPXCP8MSQ_RL	1685	1	CPXCP8MSQ_SL	1685	1
12M Grid &12M Cover Frame	CPXCP12M_SH	1979	5	CPXCP12M_RL	1979	5	CPXCP12M_SL	1979	5

Please contact Customer Care Center for Stockable and Non stockable status of references.

☑ NORMAL STOCK ITEMS

W.E.F. January 30th, 2023

Wiring Diagram Clipsal X

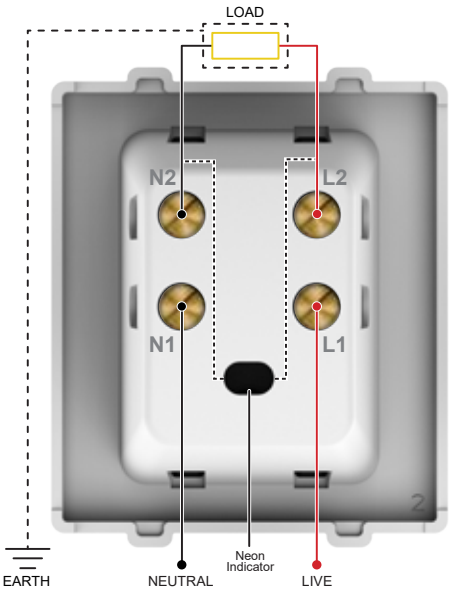

> 20A DP Switch with Indicator (2M)

CPX20DP2M_WE, CPX20DP2M_GY

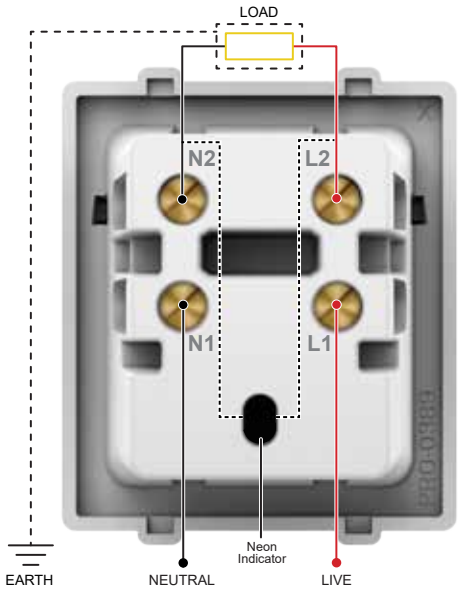

> 32A DP Switch with Indicator (2M)

CPX32DP2M_WE, CPX32DP2M_GY

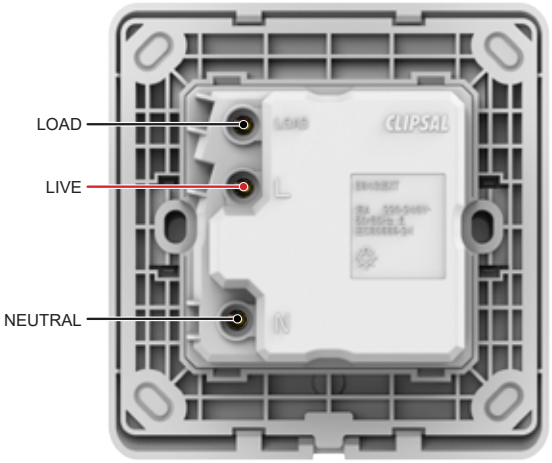

> 16A Electronic Keycard Switch

CPXKEYCARDSW_WE, CPXKEYCARDSW_GY

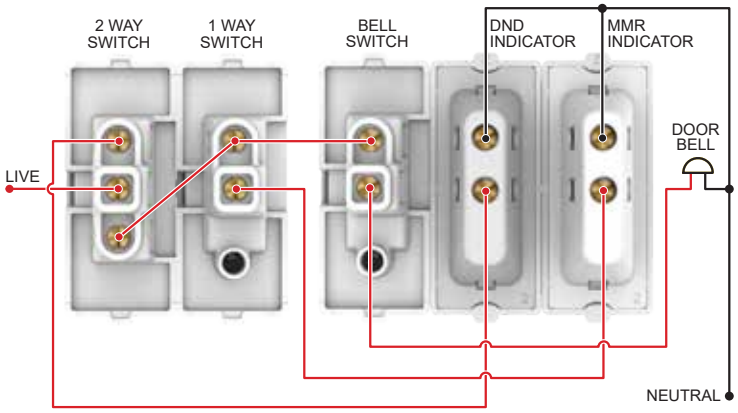

> DND Switch > MMR Switch
> DND Indicator > MMR indicator

CPXDNDSW1M_WE, CPXDNDSW1M_GY,
CPXMMRSW1M_WE, CPXMMRSW1M_GY,
CPXDNDIN1M_WE, CPXMMRIN1M_WE

Please contact Customer Care Center for Stockable and Non stockable status of references.

☑ NORMAL STOCK ITEMS

W.E.F. January 30th, 2023

Opale - Switches with Satin Finish

- **Patented Smooth Satin Finish** - Scratch Resistant, Easy to Clean & Prevents light reflection off surface
- **Safe to Use** - High grade flame retardant polycarbonate material & Child Proof sockets with unique shutter design
- **Hassle Free Operation** - 'Soft sound' switches with Gold plated Data Socket contacts for better connection
- **Easy to Install** - Snap-In / Snap-Out front loading modules and terminals with indented screws
- **Green & Eco Friendly** - RoHS compliant range

X1001WH

X1286WH

X1186WH

X1005WH

X1085WH

X2005WHNS

X2106WH

X4020WH

X3200WH

X3104WH

X4010WH

X7003WH

X5001

X5002

Description	Reference for White	Unit MRP [₹]	Pack	Reference for Coke Grey	Unit MRP [₹]	Pack
Switches						
6AX 1 way switch	X1001WH	227	20	AAKY1001	288	20
6AX 1 way switch with Indicator lamp	X1081WH	392	20	AAKY1081	464	20
6AX 2 way switch	X1002WH	313	20	AAKY1002	421	20
16AX 1 way switch	X1101WH	365	20	AAKY1101	457	20
16AX 1 way switch with Indicator lamp	X1181WH	512	20	AAKY1181	604	20
16AX 2 way switch	X1102WH	492	20	AAKY1102	631	20
6AX 1 way switch (2M)	X1021WH	431	10	AAKY1021	666	10
16AX 1 way switch (2M)	X1121WH	520	10	AAKY1121	671	10
6AX 1 way switch	X1028WH	530	10	-	-	-
16AX 1 way switch with Indicator (2M)	X1128WH	650	10	AAKY1128	982	10
20A DP switch with Indicator (2M)	X1286WH	846	10	AAKY1286	1,090	10
32A DP switch (2M)	AAKX1232	1,259	10	-	-	-
Motor Starter Switch						
25A Motor Starter switch	X1186WH	2,201	10	AAKY1186	2,864	10
Bell Push						
6A Bell Push	X1005WH	353	20	AAKY1005	469	20
6A Bell Push (2M)	X1025WH	506	10	AAKY1025	666	10
6A Bell Push with Indicator	X1085WH	509	20	AAKY1085	790	20
6A Bell Push with Indicator (2M)	X1086WH	579	10	AAKY1086	894	10
Sockets						
6A 3Pin Socket outlet with Shutter (BIS)	X2005WHNS	384	10	AAXY2005NS	464	10
6A/16A 3-Pin Socket Outlet with Shutter	X2106WH	588	10	AAKY2106	700	10
16A 3-Pin Socket Outlet with Shutter	X2103WH	661	10	AAKY2103	861	10
Fan Regulators & Dimmers						
Step Fan Regulator (1M)	X3100WH	985	10	AAKY3100	1,206	10
Step type fan regulator (2M)	X3200WH	1,381	5	AAKY3200	1,651	5
Dimmer 400W (1M)	X3104WH	1,236	10	AAKY3104	1,608	10
Dimmer 400W (2M)	X3004WH	1,923	5	AAKY3004	3,182	5
USB Chargers						
2 Gang USB Charger - 2.1A (2M)	X7003WH	3,635	15	AAKY7003	4,332	15
Accessories						
RJ11 Telephone outlet (no shutter)	X4010WH	318	10	-	390	-
RJ11 Telephone outlet with shutter	X4011WH	316	10	AAKY4011	421	10
Twin RJ11 Telephone outlets (no shutter) (1M)	X4020WH	482	10	AAKY4020	813	20
RJ45 Data Outlet with shutter	X4045WH	1,088	20	AAKY4045	1,303	20
TV Socket	X4500WH	296	10	AAKY4500	401	10
RJ45 Cover for Key Stone Type	X4050WH	395	10	AAKY4050	480	-
Gripped Cord Outlet	X4550WH	357	10	-	396	-
Buzzer	X3300WH	1,353	2	AAKY3300	1,617	2
Blank off unit (1M)	X0001WH	84	10	AAKY0001	119	20
Neon Phase Indicator (Red)	X5001	512	20	-	-	-
Neon Phase Indicator (Green)	X5002	554	20	-	-	-
Neon Phase Indicator (Yellow)	X5003	554	20	-	-	-

Please contact Customer Care Center for Stockable and Non stockable status of references.

☑ NORMAL STOCK ITEMS

W.E.F. January 30th, 2023

Opale - Switches with Satin Finish

AAKX6002 + AAKX6004 + X0702

AAKX6006 + X0703

AAKX6005

Description	Reference	Unit MRP [₹]	Pack
Hotel Series*			
DND Panel	AAKX6001	861	20
DND Switch	AAKX6002	671	20
MMR Panel	AAKX6003	813	20
MMR Switch	AAKX6004	671	20
Key Tag Switch (Mechanical Type 20 A)	AAKX6005	1,617	1
Shaver Socket	AAKX6006	7,137	1

*Available in white colour only

X0733WH

AAKX0744

AAKX0754

Description	Reference for White	Unit MRP [₹]	Pack	Reference for Coke Grey	Unit MRP [₹]	Pack	Reference for Matt Silver	Unit MRP [₹]	Pack	Reference for Matt Gold	Unit MRP [₹]	Pack
Cover Plates												
1-2 M Grid & 1 M Cover Frame	X0701	207	10	AAKY0801	273	10	AAKX0741	676	10	AAKX0751	676	10
1-2 M Grid & 2 M Cover Frame	X0702	219	10	AAKY0802	287	10	AAKX0742	570	10	AAKX0752	570	10
3 M Grid & 3 M Cover Frame	X0703	259	10	AAKY0803	316	10	AAKX0743	681	10	AAKX0753	681	10
3 M Universal Grid & 3 M Cover Frame	X0733WH	372	10	AAKY0833	567	10	AAKX0744	868	10	AAKX0754	868	10
4 M Grid & 4 M Cover Frame	X0704	304	10	AAKY0804	406	10	AAKX0745	813	10	AAKX0755	1,036	10
6 M Grid & 6 M Cover Frame	X0706	423	5	AAKY0806	502	5	AAKX0746	1,284	5	AAKX0756	1,008	5
8 M Grid & 8 M Cover Frame - Horizontal	X0708	551	5	AAKY0808	654	5	AAKX0747	1,673	5	AAKX0757	1,313	5
8 M Grid & 8 M Cover Frame - Square	X0709	651	5	AAKY0809	845	5	AAKX0748	1,673	5	AAKX0758	1,673	5
12 M Grid &12 M Cover Frame	X0712	766	5	AAKY0812	991	5	AAKX0749	2,288	5	AAKX0759	1,795	5
18 M Grid &18 M Cover Frame	AAKX0718	998	5	-		-	-		-	-	-	-

Please contact Customer Care Center for Stockable and Non stockable status of references.

☑ NORMAL STOCK ITEMS

W.E.F. January 30th, 2023

Unica Pure - Irresistibly Beautiful

Wood

Glass

Metal Rhodium Black

Sandy Beige

Polar White

Volcanic Grey

Pearl Black

Pewter Grey

Oak

Irresistibly Beautiful
- Authentic finishes - developed from the high quality natural material
- Ingenious Design - Demarcated dolly depicting clear on/off mode of the switch
- Modish Colors - perfectly gel with neutral, accent wall colors and blends perfectly with any decor

Irresistibly Safe & Sturdy
- Self Piercing Terminal - ensuring completely safe, robust and fast installation
- Facile & Guarded Technology - reduces tension in the switch rocker & increases the longevity of the switch
- Plated metal with Plastic over molded Gridplate - Robust, rigid & shock proof gridplate, ensuring durable installation on the metal box

Irresistibly Easy
- Key Hole Feature - Angular and linear adjustments of the gridplate can be easily achieved
- Revolutionary Ease of Mounting with Indicators & Markings

Irresistibly Sustainable
- Green Premium - Complies to HIGHEST INTERNATIONAL STANDARD of Green
- Certification for manufactured products (RoHS, REACH, PEP, EoLI) and is 100% Recyclable

Irresistibly Innovative
- Future Ready - Features of Voice & Mobile control to fit with smart homes

Irresistibly Versatile
- One Stop Shop - Extensive range covering residential, office, commercial or hospitality
- **Intermediate switches to control multiple 2way switches**

Unica Pure switches with six patented technologies

PATENTED PATENTED

Life Guarded Sockets

Eliminate possibility of Single Pin Insertion making it extra safe for children

PATENTED

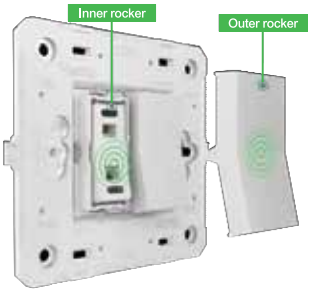

Facile & Guarded Technology

Reduces tension in the switch rocker & increases the longevity of the switch

PATENTED

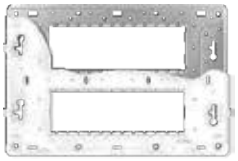

Key Hole Feature

Angular and linear adjustments of the gridplate can be easily achieved

PATENTED

Adjoining (V) Feature Technology

Ensuring perfect alignment of switches

PATENTED

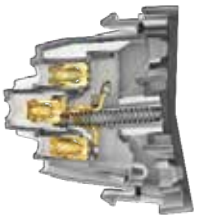

Self-piercing Terminal

Ensuring completely safe, robust and fast installation

Please contact Customer Care Center for Stockable and Non stockable status of references.

☑ NORMAL STOCK ITEMS

W.E.F. January 30th, 2023

Unica Pure - Irresistibly Beautiful

UNS61SW1M_WE

UNS161SWL1M_WE

UNS162MSWL1M_WE

UNS10SW1M_WE

UNS6SK3P2MNS_WE

UNS616SK2M_WE

UNS162SW2M_WE

UNSMTSTART2M_WE

UNS21USB2P2M_WE

UNS21USB1P1M_WE

UNS5STFAN2M_WE

UNSLEDDIM1M_WE

UNSEMERGENCY2M_WE

UNSACUSB1P1M_WE

UNSHDMI_WE

UNSCPTVDIG1M_WE

UNSSKTLT2M_WE

UNSDM1M

Description	Reference for Polar White	Unit MRP [₹]	Pack	Reference for Volcanic Grey	Unit MRP [₹]	Pack
6A Switches						
6AX 1 Way Switch	UNS61SW1M_WE	214	20	UNS61SW1M_GY	246	20
6AX 1 Way Switch With Indicator	UNS61SWL1M_WE	373	20	UNS61SWL1M_GY	428	20
6AX 2 Way Switch	UNS62SW1M_WE	305	10	UNS62SW1M_GY	341	10
6A Intermediate Switches						
10AX Intermediate Switch	UNS10SW1M_WE	1,337	1	UNS10SW1M_GY	1,612	1
16AX Switches						
16AX 1 Way Switch	UNS161SW1M_WE	356	20	UNS161SW1M_GY	416	20
16AX 1 Way Switch With Indicator	UNS161SWL1M_WE	426	20	UNS161SWL1M_GY	496	20
16AX 2 Way Switch, Polar White	UNS162SW1M_WE	463	10	UNS162SW1M_GY	545	10
16A Master Switch, 2 Way, With Locator & Label	UNS162MSWL1M_WE	1,069	20	UNS162MSWL1M_GY	1,263	1
16Ax 2 Way 2M Switch	UNS162SW2M_WE	463	10	UNS162SW2M_GY	550	10
Double Pole Switches						
20A Double Pole Switch With Indicator	UNS20DP2M_WE	843	10	UNS20DP2M_GY	992	1
32A Double Pole Switch With Indicator	UNS32DP2M_WE	1,289	10	UNS32DP2M_GY	1,537	10
Motor Starter Switch						
Motor Starter	UNSMTSTART2M_WE	1,884	10	UNSMTSTART2M_GY	2,229	10
Bell Switches						
6A Bellpress, 1M	UNS6BP1M_WE	316	20	UNS6BP1M_GY	370	20
6A Bellpress With Indicator, 1M	UNS6BPL1M_WE	429	20	UNS6BPL1M_GY	510	1
6A Bellpress, 2M, Polar White	UNS6BP2M_WE	426	10	UNS6BP2M_GY	500	1
6A Bellpress With Indicator, 2M	UNS6BPL2M_WE	525	10	UNS6BPL2M_GY	616	1
6A Sockets						
6A 3PIN Sockets outlet with Shutter (BIS)	UNS6SK3P2MNS_WE	450	10	UNS6SK3P2MNS_GY	496	10
6/16A Sockets						
6/16A Socket	UNS616SK2M_WE	527	10	UNS616SK2M_GY	655	10
USB Chargers						
2.1A 5V USB Charger, 2 Module	UNS21USB2P2M_WE	3,138	10	UNS21USB2P2M_GY	3,709	1
2.1A 5V USB Charger, 1 Module	UNS21USB1P1M_WE	2,210	20	UNS21USB1P1M_GY	2,620	20
2.4A 5V A+C USB Charger, 1 Module	UNSACUSB1P1M_WE	3,410	10	UNSACUSB1P1M_GY	3,834	10
Blank Plates						
Single Module Blank Plate	UNSBLANK1M_WE	77	20	UNSBLANK1M_GY	85	20
Fan Regulators						
4 Steps 360 Deg Fan Regulator, 1M	UNS4STFAN1M_WE	924	20	UNS4STFAN1M_GY	1,071	20
5 Steps 360 Deg Fan Regulator, 2M	UNS5STFAN2M_WE	1,465	10	UNS5STFAN2M_GY	1,653	10
Dimmers						
400W Dimmer for Incandescent, 1M	UNSDIM1M_WE	1,379	10	UNSDIM1M_GY	2,062	10
100W Dimmer for LED, 1M	UNSLEDDIM1M_WE	4,708	1	UNSLEDDIM1M_GY	5,625	10
Emergency Light Indicator						
Emergency Light Module*	UNSEMERGENCY2M_WE	9,894	1		-	-
Network, Connectivity & Media Series						
RJ 11 (WITH Shutter)	UNSRJ11_1M_WE	293	20	UNSRJ11_1M_GY	345	20
RJ 45 (WITH Shutter), Cat 6	UNSRJ45_1M_WE	1,071	20	UNSRJ45_1M_GY	1,240	20
TV Socket Coaxial	UNSTVCOAX1M_WE	303	20	UNSTVCOAX1M_GY	361	20
Volume Control	UNSVOLCTRL2M_WE	2,343	10	UNSVOLCTRL2M_GY	2,793	10
HDMI	UNSHDMI_WE	1,997	20	UNSHDMI_GY	2,252	20
TV Socket Digital (F-Connector)	UNSCPTVDIG1M_WE	337	1	UNSCPTVDIG1M_GY	405	10
Shaver Socket	UNSSHAVER_WE	7124	1	UNSSHAVER_GY	8391	1
PIR Motion Sensor*	UNSPIR_WE	9084	4	-	-	-
1 Socket + 1 Switch Prewired, 3M,	UNS1SK1SW3M_WE	1679	1	-	-	-
Polar White		-	-	-	-	-

Please contact Customer Care Center for Stockable and Non stockable status of references.

☑ NORMAL STOCK ITEMS

W.E.F. January 30th, 2023

Unica Pure - Irresistibly Beautiful

UNSEKCSW_WE

UNSCURTAINSW2M_WE

UNSSHAVER_WE

UNSPIR_WE

Description	Reference for Polar White	Unit MRP [₹]	Pack	Reference for Volcanic Grey	Unit MRP [₹]	Pack
Hotel Series*						
Skirt Light with LED, 2M	UNSSKTLT2M_WE	1,311	10	UNSSKTLT2M_GY	1,535	10
Buzzer	UNSBUZZER1M_WE	2,057	10	UNSBUZZER1M_GY	2,255	10
Cord Outlet	UNSCORD1M_WE	381	20	UNSCORD1M_GY	424	20
Door Chime	UNSCHIME2M_WE	539	10		-	-
DND / MMR Indicator*	UNSDM1M	1,416	20		-	-
DND/MMR Indicator v.2	UNSDM1M_WE	1,637		UNSDM1M_GY	1,870	
DND Switch	UNSDNDSW1M_WE	564	10	UNSDNDSW1M_GY	688	10
MMR Switch	UNSMMRSW1M_WE	564	10	UNSMMRSW1M_GY	688	10
Electronic Keycard Switch, White	UNSEKCSW_WE	7,421	5	UNSEKCSW_GY	8,578	5
Electronic Keycard Switch, Sandy Beige	UNSEKCSW_CL	7,568	5	UNSEKCSW_CD	7,466	5
Curtain Control Switch	UNSCURTAINSW2M_WE	928	10	UNSCURTAINSW2M_GY	1,076	10

UNSPHASEG1M

UNSPHASER1M

Description	Reference	Unit MRP [₹]	Pack
LED Phase Indicator			
LED Phase Indicator, Red	UNSPHASER1M	484	20
LED Phase Indicator, Green	UNSPHASEG1M	484	20
LED Phase Indicator, Yellow	UNSPHASEY1M	484	20

Please contact Customer Care Center for Stockable and Non stockable status of references.

☑ NORMAL STOCK ITEMS

W.E.F. January 30th, 2023

Unica Pure - Irresistibly Beautiful

UNPGP2M

UNPGP6M

Description	Reference for Gridplate	Unit MRP [₹]	Pack
Cover Plates			
2Module Gridplate (Fixing Frame) Only	UNPGP2M	170	4
3Module Gridplate (Fixing Frame) Only	UNPGP3M	208	9
4Module Gridplate (Fixing Frame) Only	UNPGP4M	239	8
6Module Gridplate (Fixing Frame) Only	UNPGP6M	324	9
8M Gridplate (Fixing Frame) Only, Linear	UNPGP8ML	335	9
8M Gridplate (Fixing Frame) Only, Square	UNPGP8MSQ	429	6
12Module Gridplate (Fixing Frame) Only	UNPGP12M	500	6

UNPSP2M_WD

UNPSP6M_WD

Description	Reference for Oak Wood	Unit MRP [₹]	Pack
Cover Plates			
1 Module Wood Cover Frame Only	UNPSP1M_WD	2,406	6
2 Module Wood Cover Frame Only	UNPSP2M_WD	2,557	6
3 Module Wood Cover Frame Only	UNPSP3M_WD	3,165	6
4 Module Wood Cover Frame Only	UNPSP4M_WD	3,662	6
6 Module Woodl Cover Frame Only	UNPSP6M_WD	5,226	3
8 Module Wood Cover Frame Only, Linear	UNPSP8ML_WD	6,350	3
8 Module Wood Cover Frame Only, Suare	UNPSP8MSQ_WD	7,576	6
12 Module Wood Cover Frame Only	UNPSP12M_WD	10,129	6

UNPSP2M_GW

UNPSP6M_GW

Description	Reference for Aqua Glass	Unit MRP [₹]	Pack
Cover Plates			
1Module Aqua Glass Cover Frame Only	UNPSP1M_GW	1,337	6
2Module Aqua Glass Cover Frame Only	UNPSP2M_GW	1,504	6
3Module Aqua Glass Cover Frame Only	UNPSP3M_GW	1,693	6
4Module Aqua Glass Cover Frame Only	UNPSP4M_GW	1,769	6
6Module Aqua Glass Cover Frame Only	UNPSP6M_GW	3,196	3
8M Aqua Glass Cover Frame Only, Linear	UNPSP8ML_GW	3,632	3
8M Aqua Glass Cover Frame Only, Suare	UNPSP8MSQ_GW	4,600	6
12Module Aqua Glass Cover Frame Only	UNPSP12M_GW	5,705	6

Please contact Customer Care Center for Stockable and Non stockable status of references.

☑ NORMAL STOCK ITEMS

W.E.F. January 30th, 2023

Unica Pure - Irresistibly Beautiful

UNPSP2M_GB

UNPSP6M_GB

Description	Reference for Pearl Black Glass	Unit MRP [₹]	Pack
Cover Plates			
1M Pearl Black Glass Cover Frame Only	UNPSP1M_GB	1,583	6
2M Pearl Black Glass Cover Frame Only	UNPSP2M_GB	1,780	6
3M Pearl Black Glass Cover Frame Only	UNPSP3M_GB	1,935	6
4M Pearl Black Glass Cover Frame Only	UNPSP4M_GB	2,097	6
6M Pearl Black Glass Cover Frame Only	UNPSP6M_GB	3,770	3
8M Pearl Black Glass CF Only, Linear	UNPSP8ML_GB	4,279	3
8M Pearl Black Glass CF Only, Suare	UNPSP8MSQ_GB	5,421	6
12M Pearl Black Glass Cover Frame Only	UNPSP12M_GB	6,714	6

UNPSP2M_ML

UNPSP6M_ML

Description	Reference for Pewter Grey Metal	Unit MRP [₹]	Pack
Cover Plates			
1 Module Pw Grey Metal Cover Frame Only	UNPSP1M_ML	2,377	6
2 Module Pw Grey Metal Cover Frame Only	UNPSP2M_ML	2,638	6
3 Module Pw Grey Metal Cover Frame Only	UNPSP3M_ML	3,002	6
4 Module Pw Grey Metal Cover Frame Only	UNPSP4M_ML	3,156	6
6 Module Pw Grey Metal Cover Frame Only	UNPSP6M_ML	5,589	3
8Module Pw Grey Metal CF Only, Linear	UNPSP8ML_ML	6,297	3
8 Module Pw Grey Metal CF Only, Suare	UNPSP8MSQ_ML	7,998	6
12Module Pw Grey Metal Cover Frame Only	UNPSP12M_ML	9,921	6

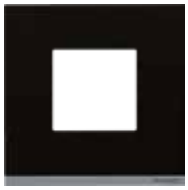

UNPSP2M_MD

UNPSP6M_MD

Description	Reference for Black Metal	Unit MRP [₹]	Pack
Cover Plates			
1Module Rh Black Metal Cover Frame Only	UNPSP1M_MD	2,377	6
2Module Rh Black Metal Cover Frame Only	UNPSP2M_MD	2,638	6
3Module Rh Black Metal Cover Frame Only	UNPSP3M_MD	3,002	6
4Module Rh Black Metal Cover Frame Only	UNPSP4M_MD	3,156	6
6Module Rh Black Metal Cover Frame Only	UNPSP6M_MD	5,589	3
8Module Rh Black Metal CF Only, Linear	UNPSP8ML_MD	6,297	3
8 Module Rh Black Metal CF Only, Suare	UNPSP8MSQ_MD	7,998	6
12M Rh Black Metal Cover Frame Only	UNPSP12M_MD	9,921	6

Please contact Customer Care Center for Stockable and Non stockable status of references.

☑ NORMAL STOCK ITEMS

W.E.F. January 30th, 2023

Unica Pure - Irresistibly Beautiful

UNPCP3M_GW

UNPCP6M_GW

UNPCP3M_GB

UNPCP6M_GB

Description	Reference for Aqua Glass	Unit MRP [₹]	Pack	Reference for Pearl Black Glass	Unit MRP [₹]	Pack
Cover Plates						
1 Module Glass Surround and Gridplate	UNPCP1M_GW*	1,512	6	UNPCP1M_GB*	1,758	6
2 Module Glass Surround and Gridplate	UNPCP2M_GW*	1,679	6	UNPCP2M_GB*	1,955	6
3 Module Glass Surround and Gridplate	UNPCP3M_GW*	1,907	6	UNPCP3M_GB*	2,149	6
4 Module Glass Surround and Gridplate	UNPCP4M_GW*	2,015	6	UNPCP4M_GB*	2,344	6
6 Module Glass Surround and Gridplate	UNPCP6M_GW*	3,529	3	UNPCP6M_GB*	4,104	3
8 Module Glass Surround and Gridplate, Linear	UNPCP8ML_GW*	3,977	3	UNPCP8ML_GB*	4,623	3
8 Module Glass Surround and Gridplate, Square	UNPCP8MSQ_GW*	5,041	3	UNPCP8MSQ_GB*	5,862	6
12 Module Glass Surround and Gridplate	UNPCP12M_GW*	6,219	6	UNPCP12M_GB*	7,228	6

UNSCP3M_CL

UNSCP6M_CL

UNSCP3M_GY

UNSCP6M_GY

Description	Reference for Pewter Grey Metal	Unit MRP [₹]	Pack	Reference for Rhodium Black Metal	Unit MRP [₹]	Pack
Cover Plates						
1 Module Metal Surround and Gridplate	UNPCP1M_ML*	2,552	6	UNPCP1M_MD*	2,552	6
2 Module Metal Surround and Gridplate	UNPCP2M_ML*	2,813	6	UNPCP2M_MD*	2,813	6
3 Module Metal Surround and Gridplate	UNPCP3M_ML*	3,216	6	UNPCP3M_MD*	3,216	6
4 Module Metal Surround and Gridplate	UNPCP4M_ML*	3,402	6	UNPCP4M_MD*	3,402	6
6 Module Metal Surround and Gridplate	UNPCP6M_ML*	5,923	3	UNPCP6M_MD*	5,923	3
8 Module Metal Surround and Gridplate, Linear	UNPCP8ML_ML*	6,642	3	UNPCP8ML_MD*	6,642	3
8 Module Metal Surround and Gridplate, Square	UNPCP8MSQ_ML*	8,440	3	UNPCP8MSQ_MD*	8,440	3
12 Module Metal Surround and Gridplate	UNPCP12M_ML*	10,435	6	UNPCP12M_MD*	10,435	6

*All real material combined plates shall be discontinued once the existing stock is exhausted.

Please contact Customer Care Center for Stockable and Non stockable status of references.

☑ NORMAL STOCK ITEMS

W.E.F. January 30th, 2023

Unica Pure - Irresistibly Beautiful

UNPCP3M_WD

UNPCP6M_WD

Description	Reference for Oak Wood	Unit MRP [₹]	Pack
Real Material Cover Plates			
1 Module Wood Surround and Gridplate	UNPCP1M_WD*	2,581	6
2 Module Wood Surround and Gridplate	UNPCP2M_WD*	2,732	6
3 Module Wood Surround and Gridplate	UNPCP3M_WD*	3,379	6
4 Module Wood Surround and Gridplate	UNPCP4M_WD*	3,909	6
6 Module Wood Surround and Gridplate	UNPCP6M_WD*	5,560	3
8 Module Wood Surround and Gridplate, Linear	UNPCP8ML_WD*	6,695	3
8 Module Wood Surround and Gridplate, Square	UNPCP8MSQ_WD*	8,018	6
12 Module Wood Surround and Gridplate	UNPCP12M_WD*	10,643	6

*All real material combined plates shall be discontinued once the existing stock is exhausted.

UNSCP3M_CL

UNSCP6M_CL

UNSCP3M_CD

UNSCP6M_CD

UNSCP3M_WE

UNSCP6M_WE

UNSCP3M_GY

UNSCP6M_GY

Description	Reference for Painted Sandy Biege	Unit MRP [₹]	Pack	Reference for Painted Mocha Brown	Unit MRP [₹]	Pack	Reference for Molded Polar White	Unit MRP [₹]	Pack	Reference for Molded Volcanic Grey	Unit MRP [₹]	Pack
Cover Plates												
1 Module Plastic Surround and Gridplate	UNSCP1M_CL	454	20	UNSCP1M_CD	446	20	UNSCP1M_WE	238	20	UNSCP1M_GY	338	20
2 Module Plastic Surround and Gridplate	UNSCP2M_CL	515	20	UNSCP2M_CD	497	20	UNSCP2M_WE	265	20	UNSCP2M_GY	378	20
3 Module Plastic Surround and Gridplate	UNSCP3M_CL	578	10	UNSCP3M_CD	580	10	UNSCP3M_WE	303	10	UNSCP3M_GY	431	10
4 Module Plastic Surround and Gridplate	UNSCP4M_CL	606	14	UNSCP4M_CD	606	14	UNSCP4M_WE	319	14	UNSCP4M_GY	460	14
6 Module Plastic Surround and Gridplate	UNSCP6M_CL	1,079	5	UNSCP6M_CD	1,043	5	UNSCP6M_WE	557	5	UNSCP6M_GY	794	5
8 Module Plastic Surround and Gridplate, Linear	UNSCP8ML_CL	1,198	5	UNSCP8ML_CD	1,176	5	UNSCP8ML_ WE	627	5	UNSCP8ML_ GY	887	5
8 Module Plastic Surround and Gridplate, Square	UNSCP8MSQ_CL	1,489	10	UNSCP8MSQ_ CD	1,489	10	UNSCP8MSQ_ WE	795	10	UNSCP8MSQ_ GY	1,206	10
9 Module Plastic Surround and Gridplate		-			-		UNSCP9M_WE	993	5	UNSCP9M_GY	1551	5
12 Module Plastic Surround and Gridplate	UNSCP12M_CL	1,861	5	UNSCP12M_CD	1,864	5	UNSCP12M_ WE	1,101	5	UNSCP12M_ GY	1,936	5
16 Module Plastic Surround and Gridplate	UNSCP16M_CL	2,523	5	UNSCP16M_CD	2,523	5	UNSCP16M_ WE	1,355	5	UNSCP16M_ GY	2,338	5
18 Module Plastic Surround and Gridplate	UNSCP18M_CL	2,703	1	UNSCP18M_CD	2,703	1	UNSCP18M_ WE	1,405	1	UNSCP18M_ GY	2,496	1

Please contact Customer Care Center for Stockable and Non stockable status of references.

☑ NORMAL STOCK ITEMS

W.E.F. January 30th, 2023

Wiring Diagram Unica Pure

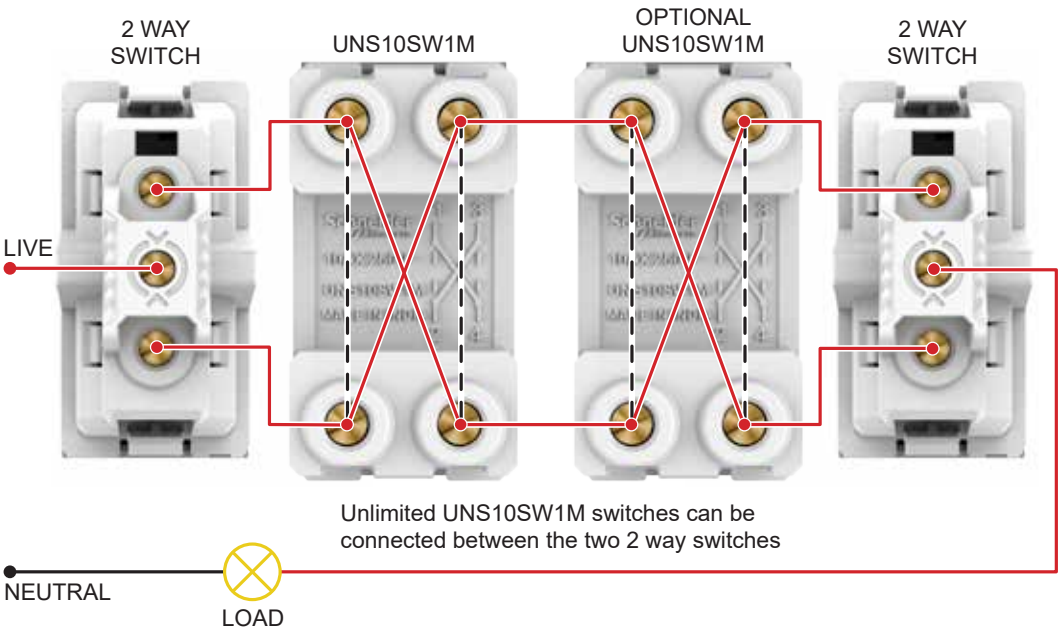

> 10AX Intermediate Switch

UNS10SW1M_WE, UNS10SW1M_GY

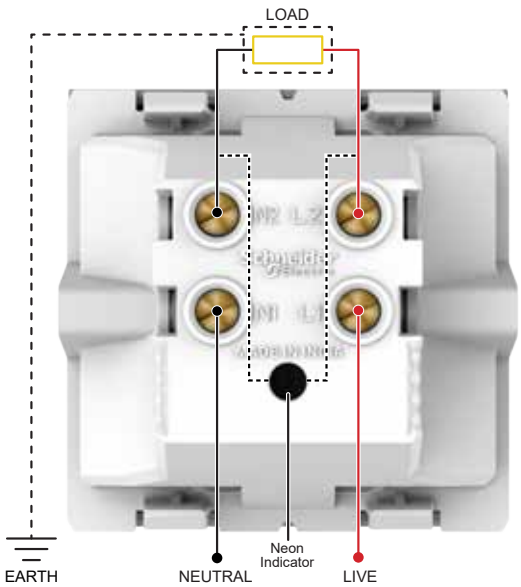

> 20A Double Pole Switch With Indicator

UNS20DP2M_WE, UNS20DP2M_GY

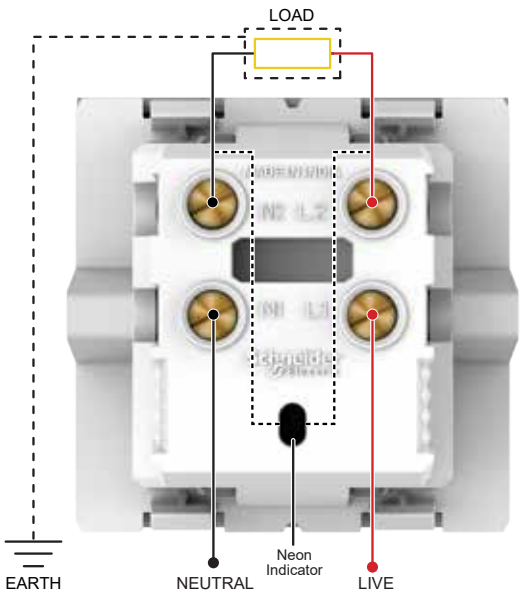

> 32A Double Pole Switch With Indicator

UNS32DP2M_WE, UNS32DP2M_GY

Please contact Customer Care Center for Stockable and Non stockable status of references.

☑ NORMAL STOCK ITEMS

W.E.F. January 30th, 2023

Wiring Diagram Unica Pure

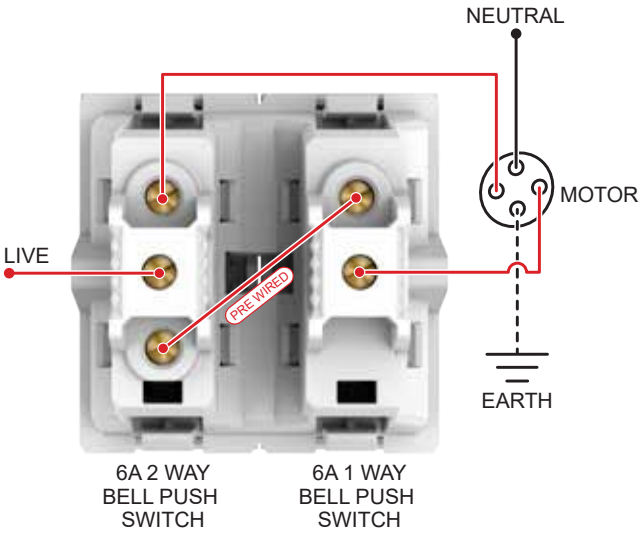

> Curtain Control Switch

UNSCURTAINSW2M_WE, UNSCURTAINSW2M_GY

> Emergency Light Module*

UNSEMERGENCY2M_WE

1. Normal Operation

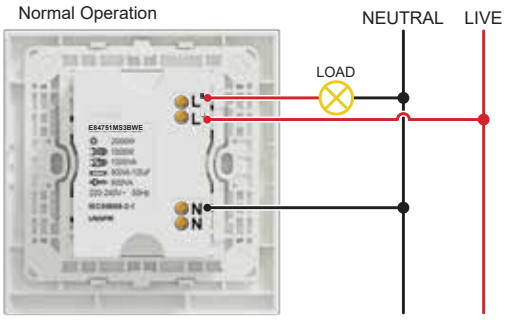

> PIR Motion Sensor*

UNSPIR_WE

2. Two sensors control one load

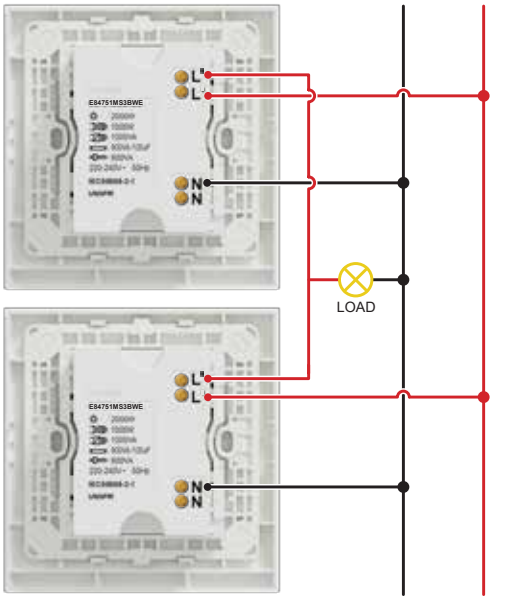

> PIR Motion Sensor*

UNSPIR_WE

3. One sensors control staircase timer (set time knob to 1s)

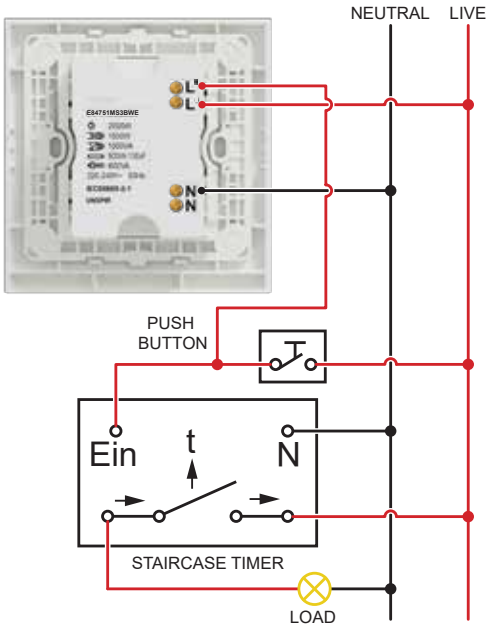

> PIR Motion Sensor*

UNSPIR_WE

Please contact Customer Care Center for Stockable and Non stockable status of references.

☑ NORMAL STOCK ITEMS

W.E.F. January 30th, 2023

Wiring Diagram Unica Pure

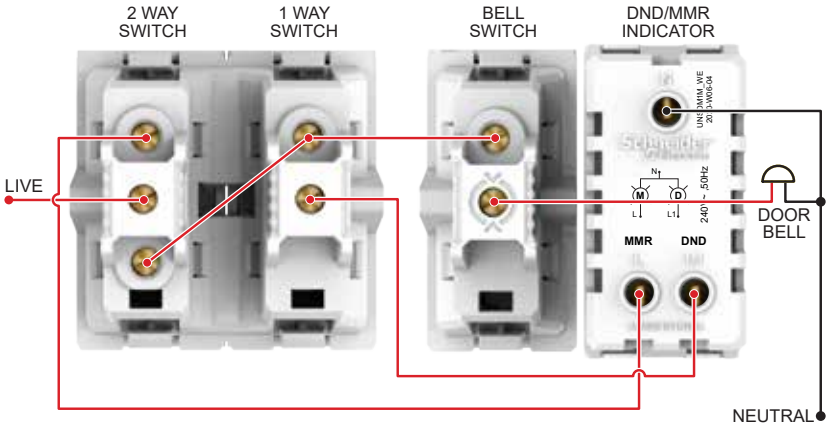

> DND/MMR Indicator v.2 > Do Not Disturb Switch
> Make My Room Switch > DND Switch
> MMR Switch

UNSDM1M_WE, UNSDM1M_GY, UNSDNDSW1M_WE, UNSDNDSW1M_GY, UNSMMRSW1M_WE, UNSMMRSW1M_GY

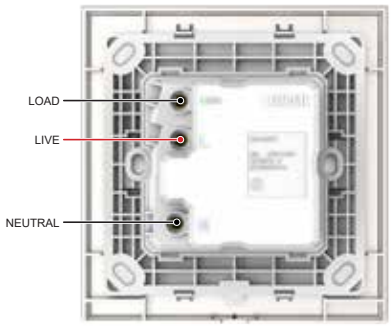

> Unica Pure Key Card

UNSEKCSW_WE, UNSEKCSW_GY, UNSEKCSW_CL, UNSEKCSW_CD

Please contact Customer Care Center for Stockable and Non stockable status of references.

NORMAL STOCK ITEMS

W.E.F. January 30th, 2023

ZENcelo India - The Revolutionary Full-Flat Switch

- **World's First and only Full**-Flat Mechanical Switch
- **Patented Iso**-Motion Technology - Ensures switch stays in the same position whether On or Off
- **Robust & Strong** - Made of corrosion-resistant, heat-resistant and impact-resistant polycarbonate
- **Safe to Use** - Electric arc encapsulated switches and Data Sockets with patented integrated shutter
- **Designed to Last** - Switches tested to 80,000 times; Sockets tested to 15,000 cycles.
- **Green & Eco Friendly** - RoHS compliant range
- **Dust Proof Cover**
- **All Dark Grey references covered with electrostatic protective film**
- **Intermediate switches to control multiple 2way switches**
- **16AX~20A 1 Way 2G Switch (1M) - IN8444/16: Single: switch to control two loads**

IN8401

IN8401/16

IN8444/16

IN8486/20

IN8405

IN8425

IN84SFR

IN8404D

IN8426/16

IN8425MS

IN8431RJS4

IN8431ACUSB_BZ

INH8451

INH8454

Description	Reference for White	Unit MRP [₹]	Pack	Reference for Dark Grey	Unit MRP [₹]	Pack
Switches						
6AX 1 Way switch	IN8401	392	10	IN8401(BZ)	491	10
6AX 1 Way switch (2M)	IN8421	653	10	IN8421(BZ)	787	10
6AX 2 Way switch	IN8402	491	10	IN8402(BZ)	589	10
6AX 1 Way switch with Neon	IN8481	611	10	IN8481(BZ)	732	10
16AX~20A 1 Way switch	IN8401/16	592	10	IN8401/16(BZ)	721	10
16AX~20A 1 Way switch (2M)	IN8421/16	871	10	IN8421/16(BZ)	1,216	10
16AX~20A 1 Way switch with Neon	IN8481/16	834	10	IN8481/16(BZ)	989	10
16AX~20A 1 Way switch with Neon (2M)	IN8482/16	1,029	10	IN8482/16(BZ)	1,212	10
16AX~20A 2 Way switch	IN8402/16	826	10	IN8402/16(BZ)	1,022	10
16AX~20A 2 Way switch (2M)	IN8422/16	989	10	IN8422/16(BZ)	1,217	10
16AX~20A 1 Way 2G switch (1M)	IN8444/16	960	10	IN8444/16(BZ)	1,157	10
10AX Intermediate switch	IN8430/IM	1,451	10	IN8430/IM(BZ)	1,640	1
20A DP Switch with Neon (2M)	IN8486/20	1,286	5	IN8486/20(BZ)	1,591	5
32A DP Switch with Neon (2M)	IN8486/32	2,019	5	IN8486/32(BZ)	2,403	5
Motor Starter Switch						
25A Motor Starter switch (2M)	IN8425MS	3,274	10	IN8425MS(BZ)	3,484	10
Bell Push						
6A Bell Push switch	IN8405	557	10	IN8405(BZ)	672	10
6A Bell Push switch (2M)	IN8425	851	10	IN8425(BZ)	1,008	10
6A Bell Push switch with Neon	IN8485	758	10	IN8485(BZ)	894	10
6A Bell Push switch with Neon (2M)	IN8486	942	10	IN8486(BZ)	1,109	10
6A Momentary Switch, WH	IN8487	723	10	IN8487_BZ	854	10
Sockets						
6A 3PIN Socket Outlet with Shutter (BIS)	IN8426UNS	641	10	IN8426UNS_BZ	776	10
6A/16A 3 Pin Socket with Shutter	IN8426/16	954	10	IN8426/16(BZ)	1,168	10
Fan Regulators & Dimmers						
Fan Control (5 Speeds)	IN84SFR	2,268	5	IN84SFR(BZ)	2,722	5
Full Flat 400W Dimmer Module (1 Gang)	IN8404D	2,041	10	IN8404D(BZ)	2,418	10
USB Chargers						
1 Gang USB Charger - 2.1A (1M)	IN8431USB_WE	3,679	10	IN8431USB_BZ	4,220	10
2 Gang USB Charger - 2.1A (2M)	IN8432USB_WE	5,380	1	IN8432USB_BZ	6,191	10
2.4A 5V A+C USB Charger (1M)	IN8431ACUSB_WE	4,027	10	IN8431ACUSB_BZ	4,615	10
Accessories						
RJ11 Telephone Outlet with shutter (1 Gang)	IN8431RJS4	613	10	IN8431RJS4(BZ)	749	10
RJ45 Cat6 Data Outlet with shutter	IN8431RJ6	2,133	10	IN8431RJ6(BZ)	2,606	10
Data Outlet Wall Plate (for RJ45 key stone jack)	IN8431RJC	635	10	IN8431RJC(BZ)	747	10
TV Socket	IN8431TV	464	10	IN8431TV(BZ)	587	10
Cord Outlet	IN8445CO	559	10	IN8445CO(BZ)	679	10
Foot Lamp with White LED (2M)	IN8490FLW	4,287	10	-	-	-
Foot Lamp with Yellow LED (2M)	IN8490FLY	4,180	10	-	-	-
Blank off unit (1M)	IN8430X	143	10	IN8430X(BZ)	176	10
Hotel Series						
Do Not Disturb Panel	INH8451	3,105	10	INH8451(BZ)	3,678	10
Make My Room Panel	INH8454	2,823	10	INH8454(BZ)	3,332	10
Do Not Disturb Switch	INH8452	1,542	10	INH8452(BZ)	1,734	10
Do Not Disturb Switch (2M)	INH8453	1,856	10	INH8453(BZ)	1,855	10
Make My Room Switch	INH8455	1,506	10	INH8455(BZ)	1,777	10

Please contact Customer Care Center for Stockable and Non stockable status of references.

☑ NORMAL STOCK ITEMS

W.E.F. January 30th, 2023

ZENcelo India - The Revolutionary Full-Flat Switch

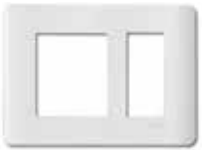

IN8403C

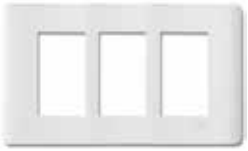

IN8406C

IN8402C(BZ)

IN8404C(SZ)

IN84012C(SA)

Description	Reference for White	Unit MRP [₹]	Pack	Reference for Dark Grey	Unit MRP [₹]	Pack	Reference for Silver Bronze	Unit MRP [₹]	Pack	Reference for Satin Silver	Unit MRP [₹]	Pack
Cover Plates												
1M Grid & 1M Cover Frame	IN8401C	368	10	IN8401C(BZ)	436	10	IN8401C(SZ)	1012	10	IN8401C(SA)	1060	10
2M Grid & 2M Cover Frame	IN8402C	382	10	IN8402C(BZ)	456	10	IN8402C(SZ)	1002	10	IN8402C(SA)	1049	10
3M Grid & 3M Cover Frame	IN8403C	450	10	IN8403C(BZ)	538	10	IN8403C(SZ)	1231	10	IN8403C(SA)	1289	10
4M Grid & 4M Cover Frame	IN8404C	490	10	IN8404C(BZ)	632	10	IN8404C(SZ)	1479	10	IN8404C(SA)	1550	10
6M Grid & 6M Cover Frame	IN8406C	748	5	IN8406C(BZ)	889	5	IN8406C(SZ)	2031	5	IN8406C(SA)	2127	5
8M Grid & 8M Cover Frame - Horizontal	IN8408HC	889	5	IN8408HC(BZ)	1063	5	IN8408HC(SZ)	2745	5	IN8408HC(SA)	2875	5
8M Grid & 8M Cover Frame - Square	IN8408SC	1175	5	IN8408SC(BZ)	1550	5	IN8408SC(SZ)	3333	5	IN8408SC(SA)	3491	5
9M Grid & 9M Cover Frame	IN8409C	1529	5	IN8409C(BZ)	1912	5	IN8409C(SZ)	4608	5	IN8409C(SA)	5446	5
12M Grid & 12M Cover Frame	IN84012C	1931	5	IN84012C(BZ)	2376	5	IN84012C(SZ)	6139	5	IN84012C(SA)	6432	5
18M Grid & 18M Cover Frame	IN84018C	2724	5	IN84018C(BZ)	3357	5	IN84018C(SZ)	8127	5	IN84018C(SA)	8514	5

ZENcelo - The Revolutionary Full-Flat Switch

E8431EKT-OS

E8432DMS>SZ-OS

E84T727H-OS

E84T727V>SZ-OS

Description	Reference for White	Unit MRP [₹]	Pack	Reference For Silver Bronze	Unit MRP [₹]	Pack
Hotel Series						
"Please Clean Up" Symbols	E8431BPDM-OS	6,115		E8431BPDM>SZ-OS	7,629	1
16A Electronic Key Card Time Delay Switch	E8431EKT-OS	12,219		E8431EKT>SZ-OS	15,275	1
Universal Shaver Unit, Vertical	E84T727V-OS	6,913		E84T727V>SZ-OS	8,611	1
Universal Shaver Unit, Horizontal	E84T727H-OS	6,913		E84T727H>SZ-OS	8, 611	1

Please contact Customer Care Center for Stockable and Non stockable status of references.

☑ NORMAL STOCK ITEMS

W.E.F. January 30th, 2023

Wiring Diagram ZENcelo

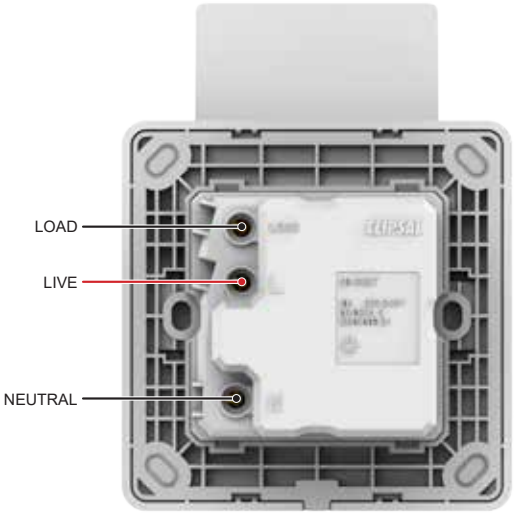

> 16A Electronic Key Card Time Delay

E8431EKT-OS, E8431EKT>SZ-OS

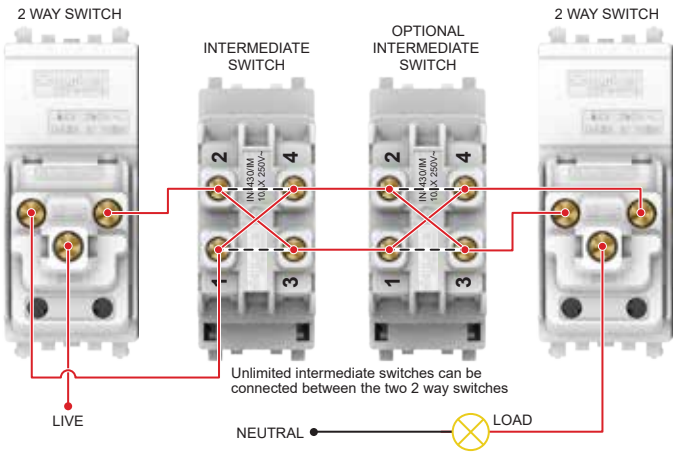

> 10AX Intermediate Switch

IN8430/IM, IN8430/IM (BZ)

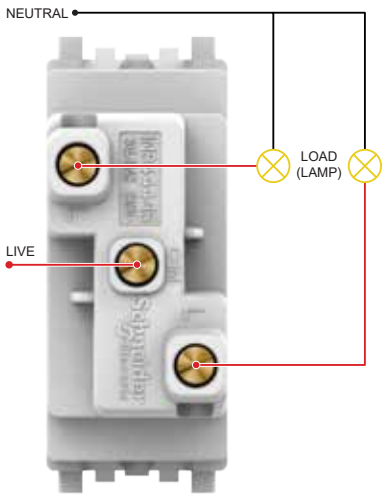

> 16AX~20A 1 Way 2G Switch (1M)

IN8444/16, IN8444/16 (BZ)

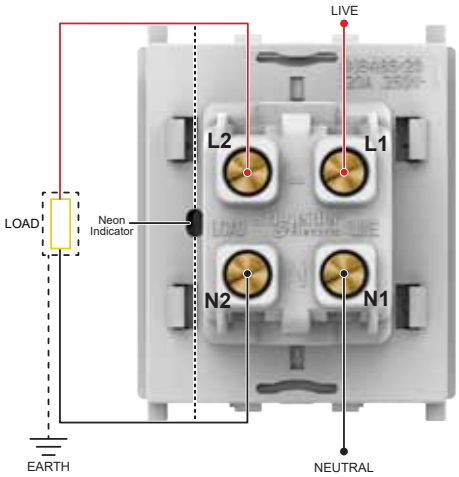

> 20A DP Switch with Neon (2M)

IN8486/20, IN8486/20 (BZ)

Please contact Customer Care Center for Stockable and Non stockable status of references.

☑ NORMAL STOCK ITEMS

W.E.F. January 30th, 2023

Wiring Diagram ZENcelo

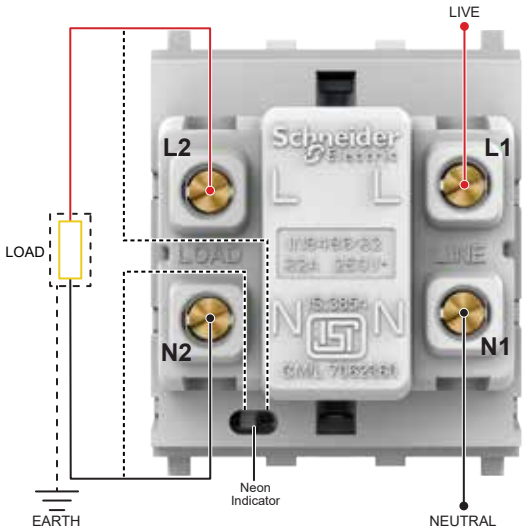

> 32A DP Switch with Neon (2M)

IN8486/32, IN8486/32 (BZ)

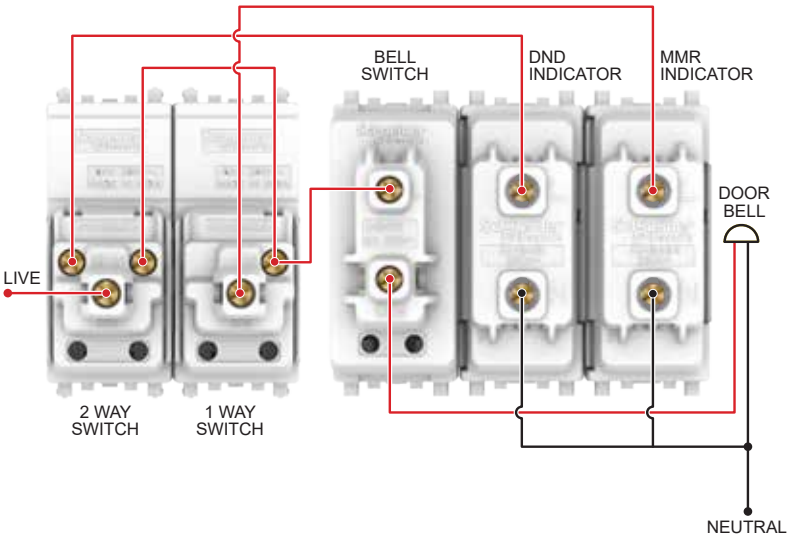

> Do Not Disturb Panel > Make My Room Panel
> Do Not Distrub Switch > Make My Room Switch

INH8451,INH8451 (BZ), INH8454, INH8454 (BZ),
INH8452, INH8452 (BZ), INH8455, INH8455 (BZ)

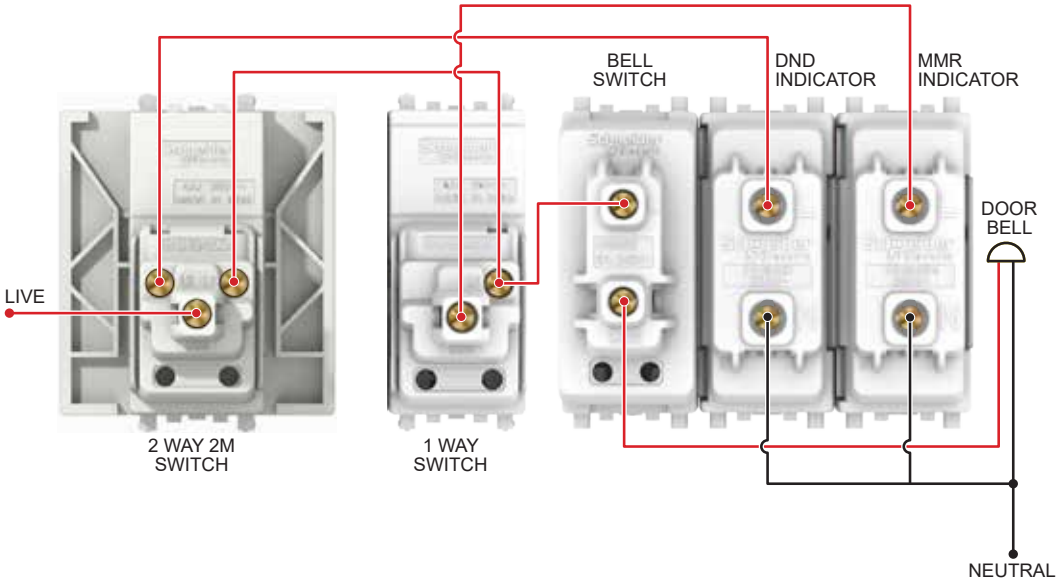

> Do Not Disturb Panel > Make My Room Panel
> Do Not Disturb Switch (2M) > Make My Room Switch

INH8451, INH8451 (BZ), INH8454, INH8454 (BZ)
INH8453, INH8453 (BZ), INH8455, INH8455 (BZ)

Please contact Customer Care Center for Stockable and Non stockable status of references.

☑ NORMAL STOCK ITEMS

W.E.F. January 30th, 2023

AvatarOn - It's also a Switch

White
(WE)

Wine Gold
(WG)

Dark Grey
(DG)

Dark Wood
(WD)

Gold Hairline
(GH)

Light Wood
(LW)

Award-winning Designs: In 2017, AvatarOn gained international recognition for its innovative design and quality excellence and was awarded the iF Design Award

Ingenious Beauty

- The ground-breaking AvatarOn series is a true marriage of aesthetics and practicality, making it a perfect choice for all home or office designs.

Safe and Reliable

- Our patented "Slim Rocker, Sure Click" SS technology not only gives AvatarOn a greater thinness overall, but also a near-zero contact jitter that reduces sparks, thus ensuring a safe and reliable use.

Customisable Covers for True Adaptability

- AvatarOn switches are available in an array of replaceable covers for full customisation and integration into any home decor. The customised pattern covers of AvatarOn provides you with an extra canvas to showcase your creativity in a subtle yet apparent way.

Modern Look

- The stylish and streamlined design of AvatarOn switch covers are finished in white, soft wood, dark wood and gold hairline materials for a classic look and universal elegance.

Tech-chic Design that Shines

- The AvatarOn soft LED locators merges seamlessly with its sleek giant dolly, creating a stylish and streamlined design and glow with a soft luminescent in the dark, indicating the exact location of each switch at night.

Multifunctional Accessories for Every Day Conveniences

E8331L1_WE_G8

E8331L1_LW_G8

E8331L1LED_WE_G8

E8331L1LED_WD_G8

E8331L2_WE_G8

E8331L2_WD_G8

E8332L1_WE_G8

E8332L1_WD_G8

E8332L2_WE_G8

E8332L2_WD_G8

Product Description	Color	Product Ref. No.	Unit MRP [₹]	Pack
16A Switches (Base + Cover Plate)				
16AX 250V 1 Gang 1 Way Switch	White	E8331L1_WE_G8	555	1
	Wine Gold	E8331L1_WG_G8	834	10
	Dark Grey	E8331L1_DG_G8	834	1
	Metal Gold Hairline	E8331L1_GH_G8	834	10
	Light Wood	E8331L1_LW_G8	834	10
	Dark Wood	E8331L1_WD_G8	834	10
16AX 250V 1 Gang 1 Way Switch with LED Indicator	White	E8331L1LED_WE_G8	834	1
	Wine Gold	E8331L1LED_WG_G8	1,247	10
	Dark Grey	E8331L1LED_DG_G8	1,247	1
	Metal Gold Hairline	E8331L1LED_GH_G8	1,247	10
	Light Wood	E8331L1LED_LW_G8	1,247	10
	Dark Wood	E8331L1LED_WD_G8	1,247	10
16AX 250V 1 Gang 2 Way Switch	White	E8331L2_WE_G8	593	1
	Wine Gold	E8331L2_WG_G8	890	10
	Dark Grey	E8331L2_DG_G8	890	1
	Metal Gold Hairline	E8331L2_GH_G8	890	10
	Light Wood	E8331L2_LW_G8	890	10
	Dark Wood	E8331L2_WD_G8	890	10
16AX 250V 1 Gang 2 Way Switch with LED Indicator	White	E8331L2LED_WE_G8	890	10
	Wine Gold	E8331L2LED_WG_G8	1,336	10
	Dark Grey	E8331L2LED_DG_G8	1,336	1
	Metal Gold Hairline	E8331L2LED_GH_G8	1,336	10
	Light Wood	E8331L2LED_LW_G8	1,336	10
	Dark Wood	E8331L2LED_WD_G8	1,336	10
16AX 250V 2 Gang 1 Way Switch	White	E8332L1_WE_G8	857	1
	Wine Gold	E8332L1_WG_G8	1,287	10
	Dark Grey	E8332L1_DG_G8	1,287	1
	Metal Gold Hairline	E8332L1_GH_G8	1,287	10
	Light Wood	E8332L1_LW_G8	1,287	10
	Dark Wood	E8332L1_WD_G8	1,287	10
16AX 250V 2 Gang 1 Way Switch with LED Indicator	White	E8332L1LED_WE_G8	1,287	1
	Wine Gold	E8332L1LED_WG_G8	1,931	10
	Dark Grey	E8332L1LED_DG_G8	1,931	1
	Metal Gold Hairline	E8332L1LED_GH_G8	1,931	10
	Light Wood	E8332L1LED_LW_G8	1,931	10
	Dark Wood	E8332L1LED_WD_G8	1,931	10
16AX 250V 2 Gang 2 Way Switch	White	E8332L2_WE_G8	1,043	1
	Wine Gold	E8332L2_WG_G8	1,565	10
	Dark Grey	E8332L2_DG_G8	1,565	1
	Metal Gold Hairline	E8332L2_GH_G8	1,565	10
	Light Wood	E8332L2_LW_G8	1,565	10
	Dark Wood	E8332L2_WD_G8	1,565	10

Please contact Customer Care Center for Stockable and Non stockable status of references.

☑ NORMAL STOCK ITEMS

W.E.F. January 30th, 2023

AvatarOn - It's also a Switch

E8332L2LED_WE_G8

E8332L2LED_WD_G8

E8333L1LED_WE_G8

E8333L1LED_WD_G8

E8333L2_WE_G8

E8333L2_WD_G8

E8333L2LED_WE_G8

E8333L2LED_WD_G8

E8334L1_WE_G8

E8334L1_WD_G8

E8334L1LED_WE_G8

E8334L1LED_WD_G8

E8334L2_WE_G8

E8334L2_WD_G8

E8334L2LED_WE_G8

E8334L2LED_WD_G8

Product Description	Color	Product Ref. No.	Unit MRP [₹]	Pack
16A Switches (Base + Cover Plate)				
16AX 250V 2 Gang 2 Way Switch with LED Indicator	White	E8332L2LED_WE_G8	1,565	10
	Wine Gold	E8332L2LED_WG_G8	2,349	10
	Dark Grey	E8332L2LED_DG_G8	2,349	1
	Metal Gold Hairline	E8332L2LED_GH_G8	2,349	10
	Light Wood	E8332L2LED_LW_G8	2,241	10
	Dark Wood	E8332L2LED_WD_G8	2,349	10
16AX 250V 3 gang 1 Way Switch	White	E8333L1_WE_G8	1,407	1
	Wine Gold	E8333L1_WG_G8	2,111	10
	Dark Grey	E8333L1_DG_G8	2,111	1
	Metal Gold Hairline	E8333L1_GH_G8	2,111	10
	Light Wood	E8333L1_LW_G8	2,111	10
	Dark Wood	E8333L1_WD_G8	2,111	10
16AX 250V 3 gang 1 Way Switch with LED Indicator	White	E8333L1LED_WE_G8	2,111	10
	Wine Gold	E8333L1LED_WG_G8	3,165	10
	Dark Grey	E8333L1LED_DG_G8	3,165	1
	Metal Gold Hairline	E8333L1LED_GH_G8	3,165	10
	Light Wood	E8333L1LED_LW_G8	3,165	10
	Dark Wood	E8333L1LED_WD_G8	3,165	10
16AX 250V 3 gang 2 Way Switch	White	E8333L2_WE_G8	1,514	1
	Wine Gold	E8333L2_WG_G8	2,273	10
	Dark Grey	E8333L2_DG_G8	2,273	1
	Metal Gold Hairline	E8333L2_GH_G8	2,273	10
	Light Wood	E8333L2_LW_G8	2,273	10
	Dark Wood	E8333L2_WD_G8	2,273	10
1 6AX 250V 3 gang 2 Way Switch with LED Indicator	White	E8333L2LED_WE_G8	2,273	10
	Wine Gold	E8333L2LED_WG_G8	3,408	10
	Dark Grey	E8333L2LED_DG_G8	3,408	1
	Metal Gold Hairline	E8333L2LED_GH_G8	3,408	10
	Light Wood	E8333L2LED_LW_G8	3,253	10
	Dark Wood	E8333L2LED_WD_G8	3,408	10
16AX 250V 4 Gang 1 Way Switch	White	E8334L1_WE_G8	2,024	1
	Wine Gold	E8334L1_WG_G8	3,037	10
	Dark Grey	E8334L1_DG_G8	3,037	1
	Metal Gold Hairline	E8334L1_GH_G8	3,037	10
	Light Wood	E8334L1_LW_G8	3,037	10
	Dark Wood	E8334L1_WD_G8	3,037	10
16AX 250V 4 Gang 1 Way Switch with LED Indicator	White	E8334L1LED_WE_G8	3,037	10
	Wine Gold	E8334L1LED_WG_G8	4,554	10
	Dark Grey	E8334L1LED_DG_G8	4,554	1
	Metal Gold Hairline	E8334L1LED_GH_G8	4,554	10
	Light Wood	E8334L1LED_LW_G8	4,554	10
	Dark Wood	E8334L1LED_WD_G8	4,554	10
16AX 250V 4 Gang 2 Way Switch	White	E8334L2_WE_G8	2,328	1
	Wine Gold	E8334L2_WG_G8	3,491	10
	Dark Grey	E8334L2_DG_G8	3,491	1
	Metal Gold Hairline	E8334L2_GH_G8	3,491	10
	Light Wood	E8334L2_LW_G8	3,491	10
	Dark Wood	E8334L2_WD_G8	3,491	10
16AX 250V 4 Gang 2 Way Switch with LED Indicator	White	E8334L2LED_WE_G8	3,491	10
	Wine Gold	E8334L2LED_WG_G8	5,237	10
	Dark Grey	E8334L2LED_DG_G8	5,237	1
	Metal Gold Hairline	E8334L2LED_GH_G8	5,237	10
	Light Wood	E8334L2LED_LW_G8	5,237	10
	Dark Wood	E8334L2LED_WD_G8	5,237	10

Please contact Customer Care Center for Stockable and Non stockable status of references.

☑ NORMAL STOCK ITEMS

W.E.F. January 30th, 2023

AvatarOn - It's also a Switch

E8331M_WE_G8

E8331M_WD_G8

E8331PRL1_WE_G8

E8331PRL1_WD_G8

E8332PRL1_WE_G8

E8332PRL1_WD_G8

E8331D20N_WE_G8

E8331D20N_WD_G8

E8331D32N_WE_G8

E8332D20N_WD_G8

E8332D20N_WE_G8

E8331D32N_WD_G8

E8331D45N_WE_G8

E8331D45N_WD_G8

Product Description	Color	Product Ref. No.	Unit MRP [₹]	Pack
16A Intermediate Switches				
16AX 250V 1 Gang Intermediate Switch	White	E8331M_WE_G8	1,647	1
	Wine Gold	E8331M_WG_G8	2,470	1
	Dark Grey	E8331M_DG_G8	2,470	1
	Metal Gold Hairline	E8331M_GH_G8	2,357	1
	Light Wood	E8331M_LW_G8	2,357	1
	Dark Wood	E8331M_WD_G8	2,357	1
10A Momentary Switches				
10A 250V 1 Gang Momentary Switch	White	E8331PRL1_WE_G8	605	10
	Wine Gold	E8331PRL1_WG_G8	905	10
	Dark Grey	E8331PRL1_DG_G8	905	1
	Metal Gold Hairline	E8331PRL1_GH_G8	905	10
	Light Wood	E8331PRL1_LW_G8	864	10
	Dark Wood	E8331PRL1_WD_G8	864	10
10A 250V 2 Gang Momentary Switch	White	E8332PRL1_WE_G8	725	10
	Wine Gold	E8332PRL1_WG_G8	1,086	10
	Dark Grey	E8332PRL1_DG_G8	1,086	1
	Metal Gold Hairline	E8332PRL1_GH_G8	1,086	10
	Light Wood	E8332PRL1_LW_G8	1,086	10
	Dark Wood	E8332PRL1_WD_G8	1,086	10
Double Pole Switches				
20A 250V 1 Gang Double Pole Switch with LED Indicator	White	E8331D20N_WE_G8	1,421	10
	Wine Gold	E8331D20N_WG_G8	2,129	10
	Dark Grey	E8331D20N_DG_G8	2,129	1
	Metal Gold Hairline	E8331D20N_GH_G8	2,129	10
	Light Wood	E8331D20N_LW_G8	2,034	10
	Dark Wood	E8331D20N_WD_G8	2,129	10
20A 250V 2 Gang Double Pole Switch with LED Indicator	White	E8332D20N_WE_G8	1,809	10
	Wine Gold	E8332D20N_WG_G8	2,556	10
	Dark Grey	E8332D20N_DG_G8	2,556	1
	Metal Gold Hairline	E8332D20N_GH_G8	2,556	10
	Light Wood	E8332D20N_LW_G8	2,556	10
	Dark Wood	E8332D20N_WD_G8	2,556	10
32A 250V 1 Gang Double Pole Switch with LED Indicator	White	E8331D32N_WE_G8	1,885	10
	Wine Gold	E8331D32N_WG_G8	2,827	10
	Dark Grey	E8331D32N_DG_G8	2,827	1
	Metal Gold Hairline	E8331D32N_GH_G8	2,827	10
	Light Wood	E8331D32N_LW_G8	2,827	10
	Dark Wood	E8331D32N_WD_G8	2,827	10
45A 250V 1 Gang Double Pole Switch with LED Indicator	White	E8331D45N_WE_G8	2,355	10
	Wine Gold	E8331D45N_WG_G8	3,534	10
	Dark Grey	E8331D45N_DG_G8	3,534	1
	Metal Gold Hairline	E8331D45N_GH_G8	3,534	10
	Light Wood	E8331D45N_LW_G8	3,534	10
	Dark Wood	E8331D45N_WD_G8	3,373	10

Please contact Customer Care Center for Stockable and Non stockable status of references.

☑ NORMAL STOCK ITEMS

W.E.F. January 30th, 2023

AvatarOn - It's also a Switch

E8331BPL1_WE_G8

E8331BPL1_WD_G8

E8315_16_WE

E8315_16_WD

E8331FR350_WE_G8

E8331FR350_WD_G8

E8331_WE

E8331_WD

E8331KH_WE

E8331KH_WD

E8332_WE

E8332_WD

E8333_WE

E8333_WD

E8333KH_WE

E8333KH_WD

Product Description	Color	Product Ref. No.	Unit MRP [₹]	Pack
Bell Push Switch				
10A 250V Door Bell Push Switch	White	E8331BPL1_WE_G8	605	1
	Wine Gold	E8331BPL1_WG_G8	905	10
	Dark Grey	E8331BPL1_DG_G8	905	1
	Metal Gold Hairline	E8331BPL1_GH_G8	905	10
	Light Wood	E8331BPL1_LW_G8	905	10
	Dark Wood	E8331BPL1_WD_G8	905	10
Sockets				
6A 2/3 Pin Switched Socket	White	E8315_6_WE	1,220	8
	Wine Gold	E8315_6_WG	1,551	8
	Dark Grey	E8315_6_DG	1,551	1
	Metal Gold Hairline	E8315_6_GH	1,551	8
	Light Wood	E8315_6_LW	1,551	8
	Dark Wood	E8315_6_WD	1,551	8
6/16A Switched Socket	White	E8315_16_WE	1,531	8
	Wine Gold	E8315_16_WG	1,947	8
	Dark Grey	E8315_16_DG	1,947	1
	Metal Gold Hairline	E8315_16_GH	1,947	8
	Light Wood	E8315_16_LW	1,947	8
	Dark Wood	E8315_16_WD	1,947	8
Fan Regulators				
5 Steps 360 Deg Fan Regulator	White	E8331FR350_WE_G8	2,907	1
	Wine Gold	E8331FR350_WG_G8	3,831	1
	Dark Grey	E8331FR350_DG_G8	3,831	1
	Metal Gold Hairline	E8331FR350_GH_G8	3,831	1
	Light Wood	E8331FR350_LW_G8	3,831	1
	Dark Wood	E8331FR350_WD_G8	3,831	1
Switch & Socket Covers (Additional)				
1 Gang Switch Cover	White	E8331_WE	160	1
	Wine Gold	E8331_WG	399	1
	Dark Grey	E8331_DG	381	1
	Metal Gold Hairline	E8331_GH	399	1
	Light Wood	E8331_LW	364	1
	Dark Wood	E8331_WD	399	1
1 Gang Switch Cover with Keyholder	White	E8331KH_WE	352	1
	Wine Gold	E8331KH_WG	636	1
	Dark Grey	E8331KH_DG	513	1
	Metal Gold Hairline	E8331KH_GH	607	1
	Light Wood	E8331KH_LW	490	1
	Dark Wood	E8331KH_WD	636	1
2 Gang Switch Cover	White	E8332_WE	242	1
	Wine Gold	E8332_WG	545	1
	Dark Grey	E8332_DG	520	1
	Metal Gold Hairline	E8332_GH	545	1
	Light Wood	E8332_LW	520	1
	Dark Wood	E8332_WD	545	1
3 Gang Switch Cover	White	E8333_WE	374	1
	Wine Gold	E8333_WG	801	1
	Dark Grey	E8333_DG	764	1
	Metal Gold Hairline	E8333_GH	801	1
	Light Wood	E8333_LW	764	1
	Dark Wood	E8333_WD	946	1
3 Gang Switch Cover with Keyholder	White	E8333KH_WE	487	1
	Wine Gold	E8333KH_WG	1,109	1
	Dark Grey	E8333KH_DG	896	1
	Metal Gold Hairline	E8333KH_GH	1,060	1
	Light Wood	E8333KH_LW	856	1
	Dark Wood	E8333KH_WD	1,109	1

Please contact Customer Care Center for Stockable and Non stockable status of references.

☑ NORMAL STOCK ITEMS

W.E.F. January 30th, 2023

AvatarOn - It's also a Switch

E8334_WE

E8334_WD

E8315C_6_WE

E8315C_6_WD

E8315C_16_WE

E8315C_16_WD

E8332USB_WE_G8

E8332USB_WD_G8

E8331_26_WE

E8332ACQUSB_WE

E8331_36_WE

E8331_46_WE

E8330TX_WE

Product Description	Color	Product Ref. No.	Unit MRP [₹]	Pack
4G Switch Cover	White	E8334_WE	527	1
	Wine Gold	E8334_WG	1,092	1
	Dark Grey	E8334_DG	1,043	1
	Metal Gold Hairline	E8334_GH	1,092	1
	Light Wood	E8334_LW	1,043	1
	Dark Wood	E8334_WD	1,092	1
6A 2/3 Pin Switched Socket Cover	White	E8315C_6_WE	429	12
	Wine Gold	E8315C_6_WG	728	12
	Dark Grey	E8315C_6_DG	728	1
	Metal Gold Hairline	E8315C_6_GH	728	12
	Light Wood	E8315C_6_LW	728	12
	Dark Wood	E8315C_6_WD	728	12
6/16A Switched Socket Cover	White	E8315C_16_WE	463	12
	Wine Gold	E8315C_16_WG	760	12
	Dark Grey	E8315C_16_DG	760	1
	Metal Gold Hairline	E8315C_16_GH	760	12
	Light Wood	E8315C_16_LW	726	12
	Dark Wood	E8315C_16_WD	760	12
USB Chargers				
2 Ports Max 2.1A USB Charger with Mobile Holder	White	E83311USB_WE_G8	5,723	1
	Wine Gold	E83311USB_WG_G8	8,584	1
	Dark Grey	E83311USB_DG_G8	8,584	1
2 x 2.1A USB Charger with Mobile Holder (2.1A with 2 outputs used simultaneously)	White	E8332USB_WE_G8	7,154	1
	Wine Gold	E8332USB_WG_G8	10,731	1
	Dark Grey	E8332USB_DG_G8	10,731	1
	Metal Gold Hairline	E8332USB_GH_G8	10,731	1
	Light Wood	E8332USB_LW_G8	10,731	1
	Dark Wood	E8332USB_WD_G8	10,731	1
21W Type A+C, PD+QC3.0 USB Charger	Metal Gold Hairline	E8332ACQUSB_GH	6,542	-
	Light Wood	E8332ACQUSB_LW	6,542	-
	Dark Wood	E8332ACQUSB_WD	6,542	-
	White	E8332ACQUSB_WE	5,288	-
	Wine Gold	E8332ACQUSB_WG	6,542	-
Blacket/Frame (to ensure allignment of switches on 2/3/4 Gang metal box)				
2 Gang Blacket/Frame	White	E8331_26_WE	265	1
	Wine Gold	E8331_26_WG	347	1
	Dark Grey	E8331_26_DG	331	1
3 Gang Blacket/Frame	White	E8331_36_WE	292	1
	Wine Gold	E8331_36_WG	408	1
	Dark Grey	E8331_36_DG	390	1
4 Gang Blacket/ Frame	White	E8331_46_WE	311	1
	Wine Gold	E8331_46_WG	438	1
	Dark Grey	E8331_46_DG	418	1
Blank Plates				
1 Gang Blank Plate	White	E8330X_WE	366	1
	Wine Gold	E8330X_WG	550	1
	Dark Grey	E8330X_DG	550	1
	Metal Gold Hairline	E8330X_GH	576	1
	Light Wood	E8330X_LW	550	1
	Dark Wood	E8330X_WD	576	1
2 Gang Blank Plate	White	E8330TX_WE	511	10
	Wine Gold	E8330TX_WG	794	10
	Dark Grey	E8330TX_DG	794	1
	Metal Gold Hairline	E8330TX_GH	794	10
	Light Wood	E8330TX_LW	759	10
	Dark Wood	E8330TX_WD	794	10

Please contact Customer Care Center for Stockable and Non stockable status of references.

☑ NORMAL STOCK ITEMS

W.E.F. January 30th, 2023

AvatarOn - It's also a Switch

E8331BPDMW_WE_G8

E8331BPDMW_WD_G8

E8331KPB_WE

E8331KPB_WD

E8332C_WE_G8

E8332C_WD_G8

E83T727V_WE

E83T727V_WD

E8330FSG_WE

E8330FSG_WD

E8330FSGN_WE

E8330FSGN_WD

E8331TB_WE

E8331TB_WD

E8331RJS4_WE

E8331RJS4_WD

Product Description	Color	Product Ref. No.	Unit MRP [₹]	Pack
Hotel Series				
DND, PCU, PW Indicator with Bell Switch (Do Not Disturb, Please Clean Up, Please Wait)	White	E8331BPDMW_WE_G8	5,209	1
	Wine Gold	E8331BPDMW_WG_G8	7,813	10
	Dark Grey	E8331BPDMW_DG_G8	7,813	1
	Metal Gold Hairline	E8331BPDMW_GH_G8	7,813	10
	Light Wood	E8331BPDMW_LW_G8	7,457	10
	Dark Wood	E8331BPDMW_WD_G8	7,813	10
16AX 3 Gang Switch with PCU, DND, PW Sym (Do Not Disturb, Please Clean Up, Please Wait)	White	E8333DMWS_WE_G8	5,051	1
	Wine Gold	E8333DMWS_WG_G8	7,233	10
	Dark Grey	E8333DMWS_DG_G8	7,578	1
	Metal Gold Hairline	E8333DMWS_GH_G8	7,578	10
	Light Wood	E8333DMWS_LW_G8	7,233	10
	Dark Wood	E8333DMWS_WD_G8	7,578	10
250V 16A Electronic Keycard Switch	White	E8331EKT_WE	9,100	1
	Wine Gold	E8331EKT_WG	13,651	1
	Dark Grey	E8331EKT_DG	13,650	1
	Metal Gold Hairline	E8331EKT_GH	13,650	8
	Light Wood	E8331EKT_LW	13,031	8
	Dark Wood	E8331EKT_WD	14,300	1
Panic Button with Key Reset	White	E8331KPB_WE	1,307	1
	Wine Gold	E8331KPB_WG	2,080	1
	Dark Grey	E8331KPB_DG	1,986	1
	Metal Gold Hairline	E8331KPB_GH	2,458	1
	Light Wood	E8331KPB_LW	1,986	1
	Dark Wood	E8331KPB_WD	2,458	1
10A 2 Gang Mechanical Curtain Switch	White	E8332C_WE_G8	1,080	1
	Wine Gold	E8332C_WG_G8	1,619	10
	Dark Grey	E8332C_DG_G8	1,619	1
	Metal Gold Hairline	E8332C_GH_G8	1,619	10
	Light Wood	E8332C_LW_G8	1,546	10
	Dark Wood	E8332C_WD_G8	1,619	10
115/240V 20VA Universal Version Shaver	White	E83T727V_WE	5,145	1
	Wine Gold	E83T727V_WG	8,181	1
	Dark Grey	E83T727V_DG	8,571	1
	Metal Gold Hairline	E83T727V_GH	8,571	1
	Light Wood	E83T727V_LW	8,181	1
	Dark Wood	E83T727V_WD	8,979	1
Connection Units				
13A 250V 1 Gang Fused Connection Unit	White	E8330FSG_WE	1,362	10
	Wine Gold	E8330FSG_WG	1,525	10
	Dark Grey	E8330FSG_DG	1,525	1
	Light Wood	E8330FSG_LW	1,525	1
	Dark Wood	E8330FSG_WD	1,525	10
13A 250V 1 Gang Fused Connection Unit with Neon	White	E8330FSGN_WE	1,476	10
	Wine Gold	E8330FSGN_WG	1,904	10
	Dark Grey	E8330FSGN_DG	1,904	1
	Light Wood	E8330FSGN_LW	1,904	1
	Dark Wood	E8330FSGN_WD	1,904	10
13A 250V 1 Gang Fused Connection with DP Switch and Neon	White	E8331DFSGN_WE	2,666	10
	Wine Gold	E8331DFSGN_WG	4,442	10
	Dark Grey	E8331DFSGN_DG	4,442	1
	Light Wood	E8331DFSGN_LW	4,442	1
	Dark Wood	E8331DFSGN_WD	4,442	10
25A 250V 1 Gang Connection Unit	White	E8331TB_WE	1,184	10
	Wine Gold	E8331TB_WG	1,973	10
	Dark Grey	E8331TB_DG	2,067	1
	Metal Gold Hairline Light	E8331TB_GH	1,973	10
	Wood	E8331TB_LW	1,973	1
	Dark Wood	E8331TB_WD	2,067	10
Telecom, Network, Connectivity & Media Series				
1 Gang Telephone Socket, Shuttered Wallplate	White	E8331RJS4_WE	794	1
	Wine Gold	E8331RJS4_WG	1,324	1
	Dark Grey	E8331RJS4_DG	1,324	1
	Metal Gold Hairline	E8331RJS4_GH	1,324	1
	Light Wood	E8331RJS4_LW	1,324	10
	Dark Wood	E8331RJS4_WD	1,324	1

Please contact Customer Care Center for Stockable and Non stockable status of references.

☑ NORMAL STOCK ITEMS

W.E.F. January 30th, 2023

AvatarOn - It's also a Switch

E8332RJS4_WE

E8331RJS5_WE

E8332RJS5_WE

E8331RJS6_WE

E8332RJS6_WE

E8331TV_WE

E8331TVSF_WE

E8332TVFMM_WE

E8332TDRJS5_WE

E8332TVRJS5_WE

E8332HDUSB_WE

E8332HDRJS5_WE

E8332HDHD_WE

E8331RCA_S_WE

E8332HD15PH_WE

E8331VC_WE

E8331SC_WE

E8332SC_WE

E8331RJS_WE

E8332RJS_WE

Product Description	Color	Product Ref. No.	Unit MRP [₹]	Pack
2G Tel Socket, Shuttered Wallplate	White	E8332RJS4_WE	1,949	1
	Wine Gold	E8332RJS4_WG	2,926	1
	Dark Grey	E8332RJS4_DG	2,793	1
1 Gang RJ45 Data Cat5E, Shuttered	White	E8331RJS5_WE	1,242	1
	Wine Gold	E8331RJS5_WG	2,166	1
	Dark Grey	E8331RJS5_DG	2,067	1
	Metal Gold Hairline Light	E8331RJS5_GH	2,067	1
	Wood	E8331RJS5_LW	2,067	10
	Dark Wood	E8331RJS5_WD	2,166	1
2 Gang RJ45 Data Cat5E, Shuttered	White	E8332RJS5_WE	2,269	1
	Wine Gold	E8332RJS5_WG	3,785	1
	Dark Grey	E8332RJS5_DG	3,613	1
	Metal Gold Hairline Light	E8332RJS5_GH	3,613	10
	Wood	E8332RJS5_LW	3,613	10
	Dark Wood	E8332RJS5_WD	3,785	1
1 Gang RJ45 Data Cat6, Shuttered	White	E8331RJS6_WE	1,483	1
	Wine Gold	E8331RJS6_WG	2,224	1
	Dark Grey	E8331RJS6_DG	2,224	1
2 Gang RJ45 Data Cat6, Shuttered	White	E8332RJS6_WE	2,780	1
	Wine Gold	E8332RJS6_WG	4,170	1
	Dark Grey	E8332RJS6_DG	834	1
1 Gang TV Socket, 75Ω, Through-Connect	White	E8331TV_WE	626	1
	Wine Gold	E8331TV_WG	1,043	1
	Dark Grey	E8331TV_DG	1,043	1
	Metal Gold Hairline Light	E8331TV_GH	1,043	10
	Wood	E8331TV_LW	994	10
	Dark Wood	E8331TV_WD	1,043	1
1 Gang TV Socket, Slave 5-1000	White	E8331TVSF_WE	692	10
	Wine Gold	E8331TVSF_WG	1,043	10
	Dark Grey	E8331TVSF_DG	994	1
2 Gang TV Master/FM Socket	White	E8332TVFMM_WE	2,513	10
	Wine Gold	E8332TVFMM_WG	3,767	10
	Dark Grey	E8332TVFMM_DG	3,767	1
1 Gang Tel + RJ45 Data Cat5E, Shuttered	White	E8332TDRJS5_WE	1,949	1
	Wine Gold	E8332TDRJS5_WG	3,249	1
	Dark Grey	E8332TDRJS5_DG	3,102	1
	Metal Gold Hairline Light	E8332TDRJS5_GH	3,102	1
	Wood	E8332TDRJS5_LW	2,961	10
	Dark Wood	E8332TDRJS5_WD	3,249	1
1 Gang TV+ RJ45 Data Cat5E, Shuttered	White	E8332TVRJS5_WE	2,417	1
	Wine Gold	E8332TVRJS5_WG	4,033	1
	Dark Grey	E8332TVRJS5_DG	3,849	1
	Metal Gold Hairline Light	E8332TVRJS5_GH	3,849	1
	Wood	E8332TVRJS5_LW	3,674	10
	Dark Wood	E8332TVRJS5_WD	4,033	1
1 Gang TV+ RJ45 Data Cat6, Shuttered	White	E8332TVRJS6_WE	2,417	1
	Wine Gold	E8332TVRJS6_WG	4,033	1
	Dark Grey	E8332TVRJS6_DG	3,849	1
HDMI + USB Socket	White	E8332HDUSB_WE	5,151	1
	Wine Gold	E8332HDUSB_WG	8,584	8
	Dark Grey	E8332HDUSB_DG	8,193	1
HDMI + RJ45 Data Cat5E, Shuttered	White	E8332HDRJS5_WE	3,135	1
	Wine Gold	E8332HDRJS5_WG	4,701	1
	Dark Grey	E8332HDRJS5_DG	4,701	1
2 Gang HDMI+HDMI , Keystone on Wallplate	White	E8332HDHD_WE	2,825	1
	Wine Gold	E8332HDHD_WG	4,708	8
	Dark Grey	E8332HDHD_DG	4,708	1
RCA/S-Video Socket	White	E8331RCA_S_WE	1,983	1
	Wine Gold	E8331RCA_S_WG	2,839	1
	Dark Grey	E8331RCA_S_DG	2,839	1
VGA + Mini Audio	White	E8332HD15PH_WE	1,983	1
	Wine Gold	E8332HD15PH_WG	2,839	1
	Dark Grey	E8332HD15PH_DG	2,839	1
Volume control, 5W, 8Ohm	White	E8331VC_WE	2,248	1
	Wine Gold	E8331VC_WG	3,372	10
	Dark Grey	E8331VC_DG	3,372	1
Speaker Connection, One Pair	White	E8331SC_WE	1,822	10
	Wine Gold	E8331SC_WG	2,864	10
	Dark Grey	E8331SC_DG	2,734	1
Speaker Connection, Two Pair	White	E8332SC_WE	2,644	1
	Wine Gold	E8332SC_WG	3,966	1
	Dark Grey	E8332SC_DG	3,786	1
1 Gang S Keystone Wallplate (w/o Mod)	White	E8331RJS_WE	587	10
	Wine Gold	E8331RJS_WG	881	10
	Dark Grey	E8331RJS_DG	881	1
2 Gang S Keystone Wallplate (w/o Mod)	White	E8332RJS_WE	1,103	10
	Wine Gold	E8332RJS_WG	1,654	10
	Dark Grey	E8332RJS_DG	1,654	1

Please contact Customer Care Center for Stockable and Non stockable status of references.

☑ NORMAL STOCK ITEMS

W.E.F. January 30th, 2023

Kavacha - Weather Protected Series

- Pleasing looks with **IP56 protection**
- Large press switch
- Co-moulded sealing with no risk of gasket damage
- Chemical resistant & UV stabilised

WHT20-GY-EX

CSW110-GY-EX

A3031WBP_WE

Description	Reference	Unit MRP [₹]	Pack
Kavacha IP56 Surface Mount Switches			
Switches with Looping Terminal			
10A 1 Gang 2 Way Switch	CSW110-GY-EX	3,543	1
20A/16A 1 Gang 2 Way Switch	CSW120-GY-EX	5,303	1
10 A 2 Gang 2 Way Switch	CSW110/2-GY-EX	6,287	1
10A 1 Gang 2 Way Bell Press Return Switch	CSW110BPR-GY-EX	3,926	1
Switches with Looping Terminal with Neon			
20A 1 Gang 2 Way with Looping Terminal with Neon	CSW120N-GY-EX	4,599	1
Double Pole Switches			
20A 1 Gang Double Pole Switch	CSW220-GY-EX	5,323	1
Kavacha Heavy Duty Isolator Switches			
35A Triple Pole	WHT35-GY-EX	6,454	1
55A Triple Pole	WHT55-GY-EX	10,590	1
63A Triple Pole	WHT63-GY-EX	8,312	1
Kavacha IP56 Surface Mount Combined Switched Socket Outlets			
Combination Switch Socket Outlets			
16A Single Pole Switched Socket Outlet	CSC316RP-GY-EX	4,360	1
Kavacha IP56 Surface Mount Socket Outlets			
16A Socket Outlet	CSO316RP-GY-EX	2,933	1
Kavacha Full-Time Weatherproof Cover			
Full-Time Weatherproof Single Gang Socket Cover (Transparent) IP55	E223R_TR	1,062	1

Please contact Customer Care Center for Stockable and Non stockable status of references.

☑ NORMAL STOCK ITEMS

W.E.F. January 30th, 2023

Metal Boxes

- **Weld free design** to minimize corrosion and rusting without compromising on strength
- Mounting clip and earth pin designed for **easier installation** and to **avoid loss during transportation**
- Removable side plates and optimized knock outs and for **easier wiring**
- Completely tested & validated as per **IS 14772**

Description	Reference	Unit MRP [₹]	Pack
Metal Boxes for Indian Format Ranges (Livia, Opale Clipsal X, Unica Pure & ZENcelo India) NEW			
0.8 mm thickness			
Metal Box 1 & 2 modules	ME0102	105	20
Metal Box 3 modules	ME0103	135	20
Metal Box 4 modules	ME0104	156	20
1 mm thickness			
Metal Box 1 & 2 modules	MR1102	116	20
Metal Box 3 modules	MR1103	153	20
Metal Box 4 modules	MR1104	177	20
Metal Box 6 modules	MR1106	240	10
Metal Box 8 modules - Horizontal	MR1108	311	10
Metal Box 8 modules - Square	MR1109	311	10
Metal Box 12 module	MR1112	400	5
Metal Box 18 modules	MR1118	474	5

Description	Reference	Unit MRP [₹]	Pack
Metal Boxes for BS Format Ranges (AvatarON,ZENcelo BS, NEO, ULTI) - New & Improved Design NEW			
Use Blacket/Frame to ensure allignment of switches on 2/3/4 Gang Metal Box (refer to Avataron section for refrences)			
1 mm thickness			
2 GANG GI Metal Boxes	MM1102	291	20
3 GANG GI Metal Boxes	MM1103	413	20
4 GANG GI Metal Boxes	MM1104	534	20

- Special Metal Box with Gang Partition to accommodate BS format ranges
- Single Metal Box can accommodate up to 4 units
- Number of Gangs for Metal Box = Number of units that it can accommodate (Eg. 3 GANG Metal Box can accommodate up to 3 BS format Units)

Please contact Customer Care Center for Stockable and Non stockable status of references.

☑ NORMAL STOCK ITEMS

W.E.F. January 30th, 2023

Make your home smart with our Wiser - Smart Homes offering.

- Easy to operate
- Easy to maintain
- Easy to control
- Easy on pocket

A solution which blends with your existing Switches and all this without any change in Wiring.

With the Internet of Things taking over the lives, automation has made lives simpler and homes smarter.

Smart homes are the base to smart cities and a much secure lifestyle. It is a connected home technology thatis designed to automate functions and grant you control over the property.

- Set the schedule, and the rest is automated and based on your personal preferences thusproviding convenience, control, money savings, and an overall smarter home.
- Alerts about lights still switched on after leaving the house
- Make personalization's to the home using just an app

Once there were smart homes, now there are Wiser™.

Smart homes are about technologies. Wiser Homes evolve around people. It adds a new dimension - being Stylish, Living Well and Eco-friendly Interlinks the electrical, multi-media and telecommunication worlds with a single and user-friendly solution - enabling you to monitor, control and access your home beyond physical boundaries at anytime, anywhere.

Features

- Integrates with any existing switch.
- Interlinks the electrical, multi-media and telecommunications worlds through Wi-Fi, providing
  - True and easy integration for devices from different brands and makes.
- The intuitive graphic user interface with jargon-free language and self-explanatory icons is easy-to-use, while the interface is consistent across different control devices and no need to spend extra time to learn different control interfaces.
- Control and access home anywhere and at any time through the secured wireless connection.
  - With time scheduling, scene control

SE Ref.	Description of reference	Unit MRP [₹]
Wiser 4 Channel Automation Relay	IH14000100	12,786
Wiser Automation Gateway	IH101ZWIFI	35,987
2 Channel Dimmer Controller	IH12000020	15,786
Wiser 1 Channel Analog Dimmer + 1 Channel Direct dimmer Controller	IH12001010	15,786
Wiser Curtain Controller	IH11000200	14,915
Fan Speed Controller	IH1200010F	15,786
Smart Doorbell	IH100WFVDP	27,211
IR Controller	IH101ZW2IR	14,786

Please contact Customer Care Center for Stockable and Non stockable status of references.

☑ NORMAL STOCK ITEMS

W.E.F. January 30th, 2023

Surface and Flush Mount Occupancy Sensors

PIR, Ultrasonic Sensors & High Frequency sensor suitable for both Surface & Flush Mount

Description	Reference	Unit MRP [₹]
Surface Mount Single-Load 360 degrees PIR	CSS54E_WE	3,788
Flush/Surface Mount Single-Load 360 degrees PIR	SAE-UE-MS-CSAWE	4,569
ARGUS Presence Dual-Tech PIR & Ultrasonic Sensor - 1ch	CCT551011	18,391
ARGUS Presence Dual-Tech - 2ch	CCT551012	16,469
ARGUS IR Remote Controller Dual-Tech	CCT556011	15,267
ARGUS Presence High Frequency High Bay Sensor - 2ch	CCT551023	18,391
ARGUS IR Remote Controller HF	CCT556023	15,267
ARGUS Presence Wide Sense - 2ch	CCT551003	15,260
INFRASCAN OUTDOOR 3WIRE 10A	750WPR-GY	19,647
INFRASCAN INDOOR 3WIRE 10A	751R-WE	10,606
INFRASCAN 360DEGREE 3WIRE	753R-WE	11,901

PIR Flush Mount Sensors

Description	Reference	Unit MRP [₹]
ARGUS Standard min 360° False ceiling indoor movement detector	CCT570005	5,453
ARGUS Standard 360° False ceiling indoor movement detector - 2ch	CCT570003	7,850
Flush Mount Dual load 360 degrees standalone sensor	SAE-UE-MS-CDBWE	9,116

Dimmable Sensors with Light Regulation

0-10V Analogue & Dali Dimmable Sensor

Description	Reference	Unit MRP [₹]
Flush/Surface Mount Dual Load 360° PIR, 0-10V Analogue Dimmable Sensor with remote	SAE-UE-MS-CDDWE	12,089
ARGUS Presence DALI 230V - 2 zones	CCT552006	19,630
ARGUS Presence DALI 230V - Slave	CCT555006	14,070
ARGUS IR Remote Controller DALI	CCT556006	16,032
ARGUS Presence Master with IR, DALI	MTN5510-1519	21,075

Please contact Customer Care Center for Stockable and Non stockable status of references.

☑ NORMAL STOCK ITEMS

W.E.F. January 30th, 2023

Wall Mount Sensors

BS Standard & Outdoor IP55 Sensor

Description	Reference	Unit MRP [₹]
Neo C-Metro 200 degrees wall mount sensor, grey colour	E3751MS3C_GS	5,581
Neo C-Metro 90 degrees wall mount sensor, grey colour	E3751MS3A_GS	7,777
Zencelo 110 degrees wall mount sensor, white colour	E84751MS3B_WE	5,507
Zencelo 90 degrees wall mount sensor, white colour	E84751MS3A_WE	5,507
Argus 110 Electronic outdoor movement detector, angle of detection 110 degrees, max. range 12 mtrs, IP55 protection	MTN565119	8,029
Argus 220 Electronic movement detector for outdoor ceiling mounting angle of detection 220 degrees, max. range 12 mtrs, IP55 protection	MTN565219	12,388
Accessories		
Mounting bracket for Argus 110 and Argus 220 Sensors	MTN565291	1,495

Hotel - ELV Dual Motion Sensor

Description	Reference	Unit MRP [₹]
ELV DUAL TECH MOTION SENSOR	SAE_UE_MS_CULV_WE	13,114

Please contact Customer Care Center for Stockable and Non stockable status of references.

☑ NORMAL STOCK ITEMS

W.E.F. January 30th, 2023

Note

Note

Life Is On | Schneider Electric

Schneider Electric India Pvt. Ltd.

Corporate Office: 9th Floor, DLF Building No. 10, Tower C, DLF Cyber City, Phase II, Gurugram 122002 Haryana
Tel.: ++91 124 6899000 Fax: ++91 124 4222036/037

Ahmedabad
Schneider Electric India (P) Ltd.
1506-1507, 15th Floor Shapth-5
Opp.Karnavati Club, SG Highway,
Ahmedabad, Gujarat - 380015
Tel.: 079-66826701

Bengaluru
Schneider Electric India (P) Ltd.
No. 3/1, JP Techno Park
Mezzanine Floor, Millers Tank Bund
Road, Vasanth Nagar
Bengaluru - 560052
Tel.: 080-71481351

Bhubaneswar
Schneider Electric India (P) Ltd.
Workloop Co-Working in the property
Office No. 316, Esplanade One Mall
Rasulgarh, Bhubaneswar - 751010

Chennai
Schneider Electric India (P) Ltd.
No: 29, 2nd Floor,
Bannari Amman Towers, B-Block
Dr. Radhakrishnan Road, Mylapore
Chennai - 600 004
Tel.:044-71912000

Cochin
Schneider Electric India (P) Ltd.
Alapatt Properties Private Limited
(Trade Name : Centre A)
Main Door Number : 66/4971
(Old Door Number: 40/6584-H)
7th Floor Alapatt Heritage Building
MG Road Kochi - 682035

Coimbatore
Schneider Electric India (P) Ltd.
Hanudev Info Tech Park, 6th Floor
Unit No. Block-C, SF No. 558/2
Udalyampalayam Road, Nava India
Coimbatore - 641028

Hyderabad
Schneider Electric India (P) Ltd.
D.No. 1-8-271, # 401, Ashoka
Bhoopal Chambers, SP Road
Secunderabad - 500003
Tel.: 040-67219500

Indore
Schneider Electric India (P) Ltd.
219, Dhan Trident Building
Vijay Nagar, A.B.Road
Indore - 452001

Jaipur
Schneider Electric India (P) Ltd.
Jaipur Business Centre 309
3rd Floor, Sangam Tower 190
Church Road, Jaipur - 302001
Tel.: 0141-2374810

Kolkata
Schneider Electric (I)Pvt.Ltd,
BP-4, Sector-V, Technopolis
3rd Floor, Salt Lake City
Kolkata - 700 091
Tel.: 033-66576400

Lucknow
Schneider Electric India (P) Ltd.
Summit, Plot No. TCG 3/3
6th Floor, 604A/B/C, Vibhuti Khand
Gomti Nagar, Lucknow
Uttar Pradesh - 226010
Tel.: 0522-3500334

Ludhiana
Schneider Electric India (P) Ltd.
SCO 23, 2nd Floor,
Chandigarh Road, Sector 32
Ludhiana, Punjab -141010
Tel.: 0161- 5203011

Mohali
Schneider Electric India (P) Ltd.
2nd Floor, Tower-A
Bestech Business Tower
Mega Information & Technology Park
Industrial Plot No.1, Phase IX
(Expansion), Mohali - 160059
Tel.: 0172-7198200

Mumbai
Schneider Electric India (P)(Ltd)
Marwah House, 2nd Floor
Krishanlal Marwah Marg
Andheri (East), Mumbai - 400072
Tel.: 022-62280000

Nagpur
Schneider Electric India (P) Ltd.
6, Vasant Vihar Complex
W.H.C Road, Shankar Nagar
Nagpur - 440010
Tel.: 0712-2558581

Nashik
Schneider Electric India (P) Ltd.
401, 4th Floor, Rishi Raj Towers
Jehan Circle, Gangapur Road
Nashik - 422013
Tel.: 0253-2344333

New Delhi
Schneider Electric India (P) Ltd.
C-56, Mayapuri Industrial Area, Phase-2
New Delhi - 110064
Tel.: 011-61317400

Pune
Schneider Electric India (P) Ltd.
Amar Caliber, CTS No 911, BMCC Road,
OFF F.C. Road, Deccan Gymkhana,
Shivaji Nagar, Pune - 411007
Tel.: 020-67492500

Vadodara
Schneider Electric India (P) Ltd.
Notus IT Park, 10th Floor, Block-D
Sarabhai Campus, Vadiwadi
Vadodara, Gujarat - 390017

Vishakhapatnam
Schneider Electric India (P) Ltd.
D.N.10-1-43, 1st Floor
Ratnam's Business Centre,
Siripuram Fort, C.B.M.Compound
Visakhapatnam - 530016
Tel.: 0891-6675500

Customer Care Centre
Monday-Saturday, 9 a.m. to 8 p.m.
Toll-free numbers: 1800 419 4272, 1800 103 0011
Email: customercare.in@schneider-electric.com

For more information, visit our website at: www.se.com/in

- All Prices are in Indian Rupees.
- Prices are subject to change without prior notice.
- Product evolution is a continuous process and Schneider Electric reserves the right to modify/withdraw any product at any time without prior notice.
- Prices charged will be as prevailing on the date of dispatch.
- Invoice Amount = (MRP – less Applicable discount) + Applicable GST %
- Tax incidence on invoices is basis applicable GST rates.
- Invoice amount not to exceed MRP.
- Product pictures shown are for illustration purpose only, actual product may vary.

Distributor